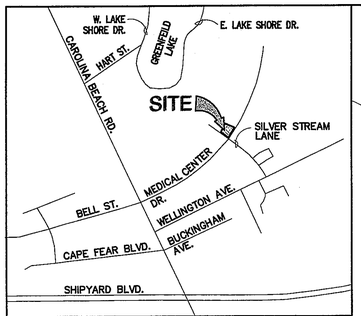

VICINITY MAP NTS

For each open utility cut of City streets, a $325 permit shall be required from the City prior to occupancy and/or project acceptance.

CITY OF WILMINGTON NORTH CAROLINA
Public Services • Engineering Division
APPROVED STORMWATER MANAGEMENT PLAN
Date:_____ Permit #_____
Signed: _____

Approved Construction Plan

	Name	Date
Planning		
Traffic		
Fire		

NCDENR PWSS WATER PERMIT #: _____
WATER CAPACITY: _____GPD
DWQ SEWER PERMIT #: _____
SEWER CAPACITY: _____GPD
SEWER SHED # AND PLANT: _____
SEWER TO FLOW THROUGH NEI: YES or NO (CIRCLE ONE)

INVENTORY SITE DATA

EXISTING PARCEL ID#:	R06018-003-059-000
EXISTING PARCEL PIN#:	312614.24.7620.000
PARCEL ADDRESS:	839 MEDICAL CENTER DRIVE
PARCEL OWNER:	KISMET WILMINGTON, LLC
EXISTING PARCEL AREA:	2.00 AC
EXISTING PARCEL USE:	VACANT
PROPOSED PARCEL USE:	COMMERCIAL (HOTEL)
CURRENT ZONING:	O&I-1 OFFICE & INSTITUTION
CAMA LAND CLASSIFICATION:	URBAN - NO CAMA AREAS OF CONCERN OR ASSOCIATED SETBACKS
SOIL TYPE:	KE
SITE DOES NOT LIE WITHIN A SPECIAL FLOOD HAZARD AREA	
HISTORICAL/ARCHAEOLOGICAL SITE:	NONE
CEMETERY:	NONE
FORESTED AREA:	SEE PLAN FOR TREE SURVEY
WETLANDS:	NONE EXIST WITHIN SITE AREA
ENDANGERED SPECIES/HABITAT:	NONE REPORTED

SURVEY LEGEND

E.I.P. = EXISTING IRON PIPE
E.I.R. = EXISTING IRON REBAR
N.P.F. = NO POINT FOUND
N.P.S. = NO POINT SET
P.C. = PROPOERTY CORNER
℄ = PROPERTY LINE
± = APPROXIMATE
OHP = OVERHEAD POWER
SSMH = SANITARY SEWER MANHOLE
SSCO = SANITARY SEWER CLEAN OUT
SDMH = STORM DRAIN MANHOLE
×21.61 = SPOT ELEVATION
○ pine 18 = EXISTING TREE (TYPE & SIZE)

PROPERTY LINE
STORM DRAIN
CENTERLINE
EASEMENT
CONCRETE

SCALE: 1" = 20'
0 20 40 60

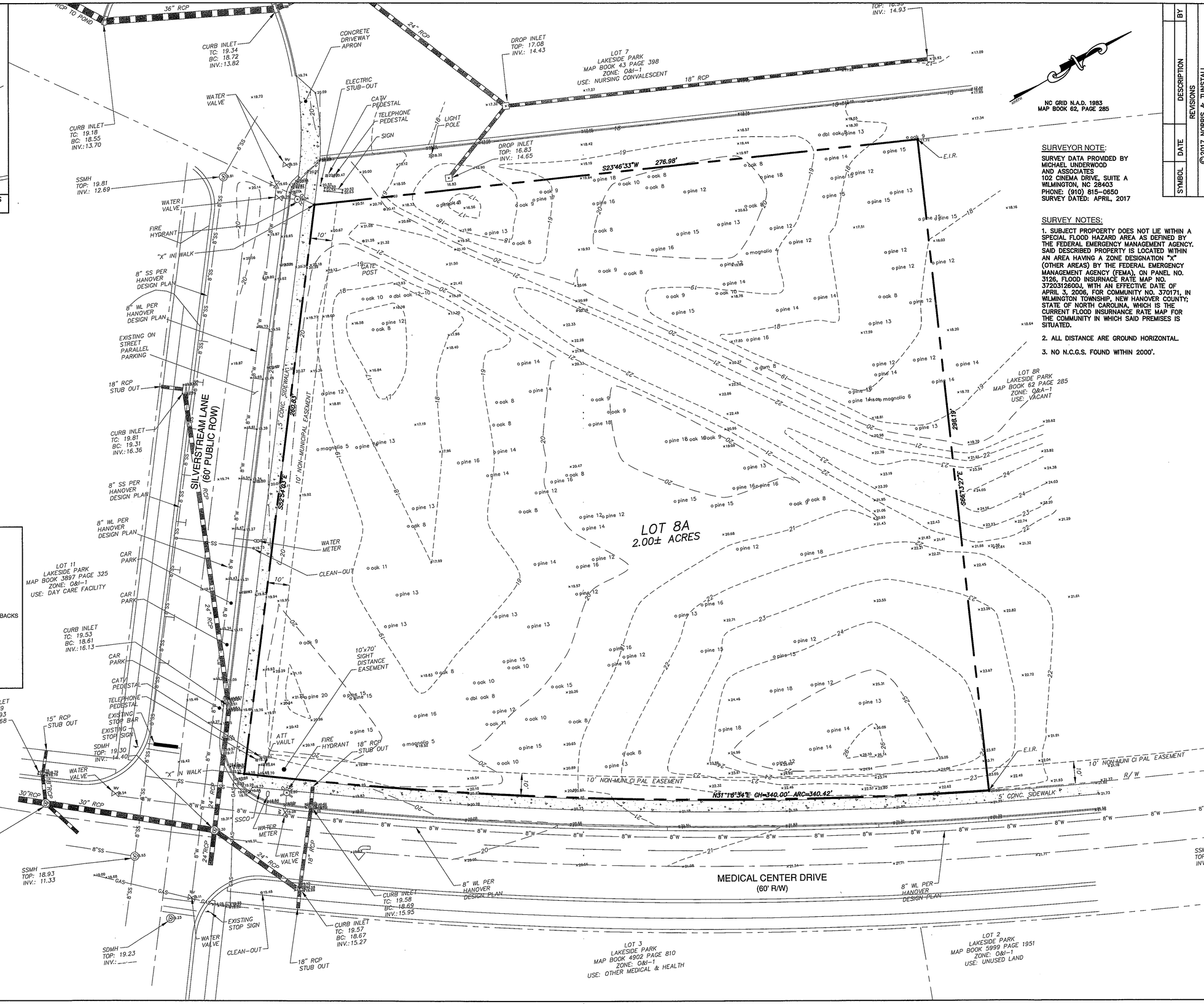

SURVEYOR NOTE:

SURVEY DATA PROVIDED BY MICHAEL UNDERWOOD AND ASSOCIATES
102 CINEMA DRIVE, SUITE A
WILMINGTON, NC 28403
PHONE: (910) 815-0650
SURVEY DATED: APRIL, 2017

SURVEY NOTES:

1. SUBJECT PROPOERTY DOES NOT LIE WITHIN A SPECIAL FLOOD HAZARD AREA AS DEFINED BY THE FEDERAL EMERGENCY MANAGEMENT AGENCY. SAID DESCRIBED PROPERTY IS LOCATED WITHIN AN AREA HAVING A ZONE DESIGNATION "X" (OTHER AREAS) BY THE FEDERAL EMERGENCY MANAGEMENT AGENCY (FEMA), ON PANEL NO. 3126, FLOOD INSURNACE RATE MAP NO. 3720312600J, WITH AN EFFECTIVE DATE OF APRIL 3, 2006, FOR COMMUNITY NO. 370171, IN WILMINGTON TOWNSHIP, NEW HANOVER COUNTY; STATE OF NORTH CAROLINA, WHICH IS THE CURRENT FLOOD INSURANCE RATE MAP FOR THE COMMUNITY IN WHICH SAID PREMISES IS SITUATED.
2. ALL DISTANCE ARE GROUND HORIZONTAL.
3. NO N.C.G.S. FOUND WITHIN 2000'.

SYMBOL	DATE	DESCRIPTION	BY
		REVISIONS	

©2017 NORRIS & TUNSTALL

RECEIVED NOV - 8 2017 PLANNING DIVISION

INVENTORY SITE PLAN
HOLIDAY INN EXPRESS AND SUITES
839 MEDICAL CENTER DRIVE
WILMINGTON, N. C.

DEVELOPER
MANULEA AHLUWALIA, MANAGER
KISMET WILMINGTON, LLC
5518 SUNSTAR COURT
CHARLOTTE, NC 28226
(PHONE) 704-507-1814

NORRIS & TUNSTALL
CONSULTING ENGINEERS P.C.
1429 ASH-LITTLE RIVER RD. NW
ASH, NC 28420
PHONE (910) 287-5900
902 MARKET STREET
WILMINGTON, NC 28401
PHONE (910) 343-9653

Licence #C-3641

17039

DES. TJC
CKD. JST
DRWN. SLF

DATE: 10/02/2017

NORTH CAROLINA PROFESSIONAL SEAL 19851 ENGINEER JOHN S. TUNSTALL

11

F:\Projects\2017\17039 Holiday Inn Express\17039 Plans\dwg\17039_Master.dwg (I-INVENTORY SITE PLAN) Plotted on: Nov 03, 2017 - 2:13pm by Caduser

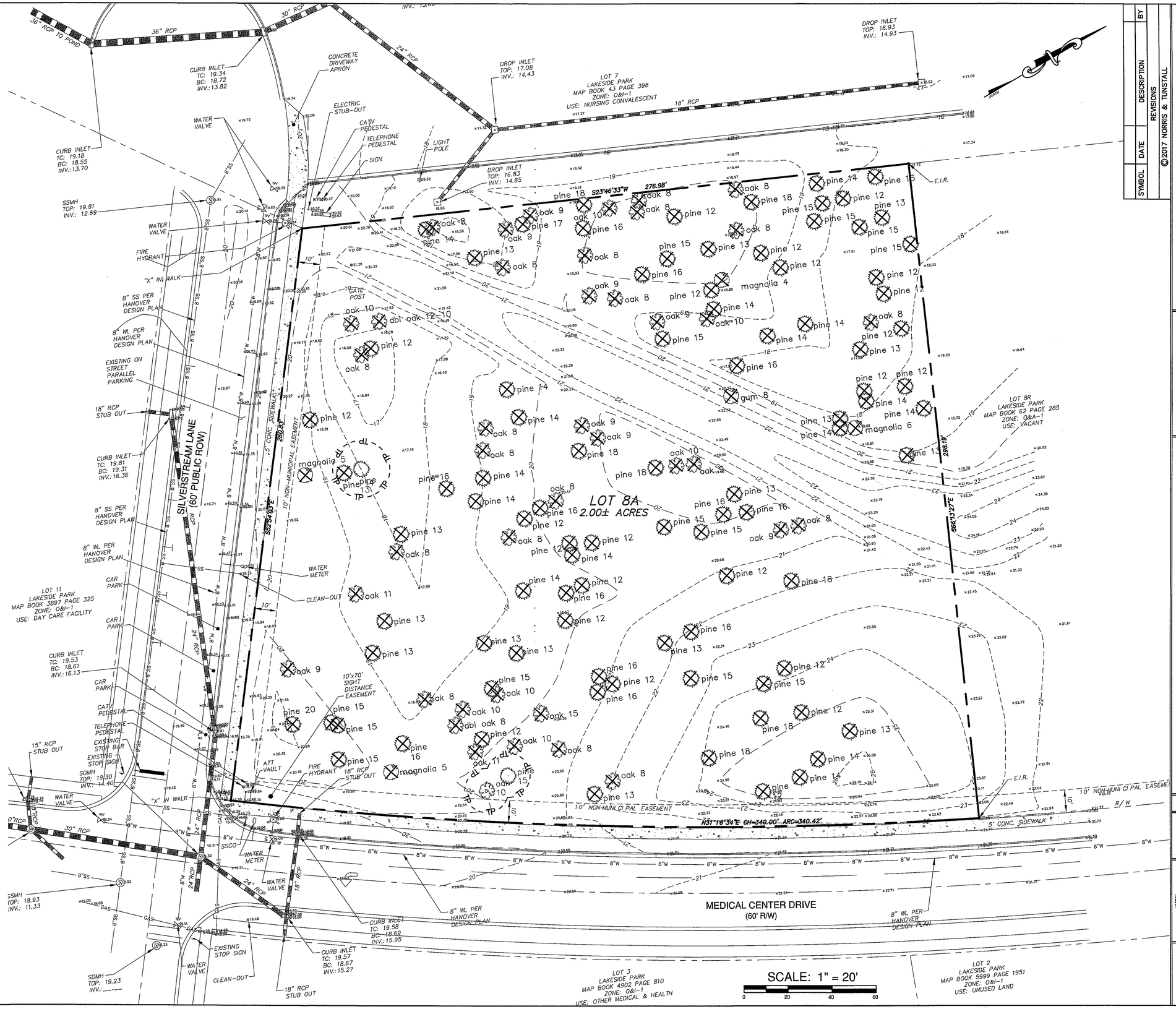

TREE LEGEND

- : LOCATION OF A HARDWOOD TREE
- : LOCATION OF A CONIFER TREE
- : LOCATION OF A FLOWERING TREE
- : INDICATES A TREE TO BE REMOVED
- : INDICATES A TREE TO PROTECTED

TREE REMOVAL TABLE

NOTE: THERE ARE 138 REGULATED TREES AND NO SIGNIFICANT TREES ON THE SITE.

REGULATED TREES TO BE REMOVED:

OAK
8" = 19 TREES
9" = 9 TREES
10" = 7 TREES
11" = 1 TREE
15" = 1 TREE

GUM TREE
8" = 1 TREE

PINE
12" = 23 TREES
13" = 15 TREES
14" = 17 TREES
15" = 15 TREES
16" = 12 TREES
17" = 1 TREES
18" = 8 TREES
20" = 1 TREE

FLOWERING
4" MAGNOLIA = 1 TREE
5" MAGNOLIA = 2 TREE
6" MAGNOLIA = 1 TREE

TOTAL: = 135 TREES TO BE REMOVED

For each open utility cut of City streets, a $325 permit shall be required from the City prior to occupancy and/or project acceptance.

CITY OF WILMINGTON NORTH CAROLINA
Public Services • Engineering Division
APPROVED STORMWATER MANAGEMENT PLAN
Date:_____ Permit #_____
Signed: _____

Approved Construction Plan

	Name	Date
Planning		
Traffic		
Fire		

NCDENR PWSS WATER PERMIT #: _____
WATER CAPACITY: _____ GPD
DWQ SEWER PERMIT #: _____
SEWER CAPACITY: _____ GPD
SEWER SHED # AND PLANT: _____
SEWER TO FLOW THROUGH NEI: YES or NO (CIRCLE ONE)

SYMBOL	DATE	DESCRIPTION	BY
		REVISIONS	

©2017 NORRIS & TUNSTALL

TREE REMOVAL PLAN

HOLIDAY INN EXPRESS AND SUITES
839 MEDICAL CENTER DRIVE
WILMINGTON, N. C.

DEVELOPER
MANJULA AHLUWALIA, MANAGER
KISMET WILMINGTON, LLC
5514 DUNSTER COURT
CHARLOTTE, NC 28226
(PHONE) 704-607-1814

NORRIS & TUNSTALL
CONSULTING ENGINEERS P.C.
902 MARKET STREET
WILMINGTON, NC 28401
PHONE (910) 343-9653
1429 ASH-LITTLE RIVER RD. NW
AVOCA, NC 28810
PHONE (910) 287-5900
Licence #C-3641

17039

DES. TJC
CKD. JST
DRWN. SLF
DATE: 10/02/2017

NORTH CAROLINA PROFESSIONAL SEAL 19851 ENGINEER JOHN S. TUNSTALL 10/2/17

C1

F:\Projects\2017\17039 Holiday Inn Express\17039_Plans\dwg\17039_Master-rev4.dwg (C1-TREE REMOVAL PLAN) Plotted on: Nov 03, 2017 - 2:15pm by Caduser

LEGEND

- PROPOSED BUILDING FOOTPRINT
- PROPOSED CURB AND GUTTER
- PROPERTY BOUNDARY
- STREET YARD SETBACKS
- ZONE SETBACKS
- EXISTING CONTOUR
- DISTURBED LIMITS
- TSF — TEMPORARY SILT FENCE
- SD — STORM PIPE
- ROOF DRAIN PIPE
- HANDICAP LOADING/CROSSING
- ROCK CONSTRUCTION ENTRANCE
- HC — HANDICAP PARKING STALL
- (4) — PARKING COUNT
- PROPOSED HANDICAP RAMP
- ONE WAY
- × 21.6 — SPOT ELEVATION
- × 21.6 — SPOT ELEVATION TOP OF CURB
- × 21.6 — SPOT ELEVATION GUTTER/EP

LEGEND	1. GROUND STABILIZATION		
	SITE AREA DESCRIPTION	STABILIZATION TIME FRAME	STABILIZATION TIME FRAME EXCEPTIONS
	PERIMETER DIKES, SWALES, DITCHES AND SLOPES	7 DAYS	NONE
	HIGH QUALITY WATER (HQW) ZONES.	7 DAYS	NONE
	SLOPES STEEPER THAN 3:1	7 DAYS	IF SLOPES ARE 10' OR LESS IN LENGTH AND ARE NOT STEEPER THAN 2:1, 14 DAYS ARE ALLOWED
	SLOPES 3:1 OR FLATTER	14 DAYS	7 DAYS FOR SLOPES GREATER THAN 50' IN LENGTH.
	ALL OTHER AREAS WITH SLOPES FLATTER THAN 4:1	14 DAYS	NONE (EXCEPT FOR PERIMETERS AND HQW ZONES).

2. BUILDING WASTES HANDLING
- NO PAINT OR LIQUID WASTES IN STREAM OR STORM DRAINS
- DEDICATED AREA FOR DEMOLITION, CONSTRUCTION AND OTHER WASTES MUST BE LOCATED 50' FROM STORM DRAINS AND STREAMS UNLESS NO ALTERNATIVE IS AVAILABLE.
- EARTHEN MATERIALS STOCKPILES MUST BE LOCATED 50' FROM STORM DRAINS AND STREAMS UNLESS NO REASONABLE ALTERNATIVE IS AVAILABLE
- CONCRETE MATERIALS MUST BE CONTROLLED TO AVOID CONTACT WITH SURFACE WATERS, WETLANDS, OR BUFFERS.

3. INSPECTIONS
- SAME WEEKLY INSPECTION REQUIREMENTS
- SAME RAIN GUAGE AND INSPECTIONS AFTER 0.5" RAIN EVENT
- INSPECTIONS ARE ONLY REQUIRED DURING "NORMAL BUISNESS HOURS"
- RECORDS MUST BE KEPT FOR 3 YEARS AND AVAILABLE UPON REQUEST
- ELECTRONICALLY AVAILABLE RECORDS MAY BE SUBSTITUTED UNDER CERTAIN CONDITIONS

4. SEDIMENT BASINS
- OUTLET STRUCTURES MUST WITHDRAW FROM BASIN SURFACE UNLESS DRAINAGE AREA IS LESS THAN ONE ACRE
- USE ONLY DWQ APPROVED FLOCCULANTS

For each open utility cut of City streets, a $325 permit shall be required from the City prior to occupancy and/or project acceptance.

CITY OF WILMINGTON NORTH CAROLINA
Public Services • Engineering Division
APPROVED STORMWATER MANAGEMENT PLAN
Date:_____ Permit #_____
Signed: _____

Approved Construction Plan
Name Date
Planning_____
Traffic_____
Fire_____

NCDENR PWSS WATER PERMIT #: _____
WATER CAPACITY: _____GPD
DWQ SEWER PERMIT #: _____
SEWER CAPACITY: _____GPD
SEWER SHED # AND PLANT: _____
SEWER TO FLOW THROUGH NEI: YES or NO (CIRCLE ONE)

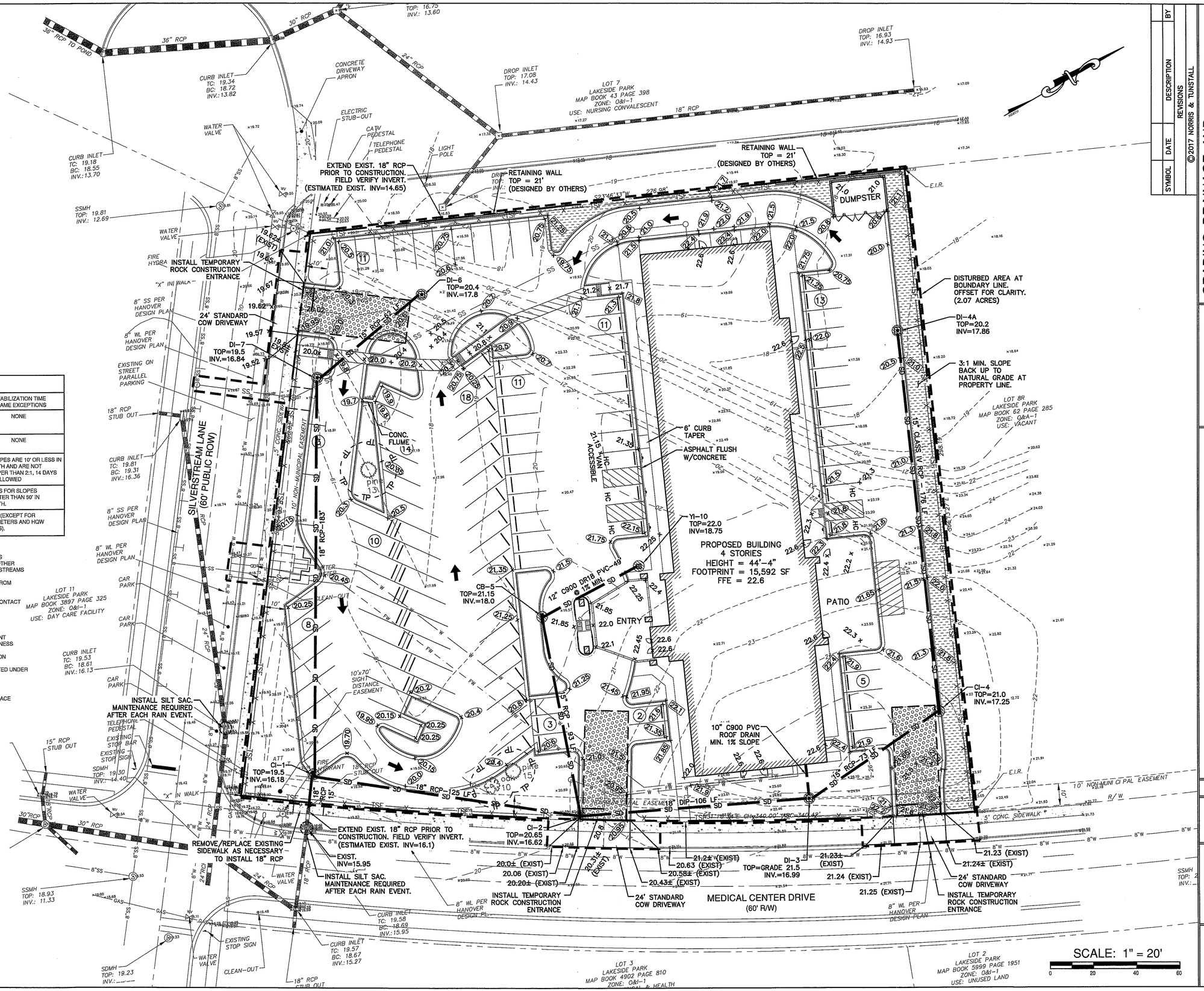

SYMBOL	DATE	DESCRIPTION	BY
		REVISIONS	

©2017 NORRIS & TUNSTALL

GRADING, DRAINAGE, AND EROSION CONTROL PLAN
HOLIDAY INN EXPRESS AND SUITES
839 MEDICAL CENTER DRIVE
WILMINGTON, N. C.

DEVELOPER
MANJULA AHLUWALIA, MANAGER
ASHWET WILMINGTON, LLC
6135 PARK SOUTH DRIVE, SUITE
CHARLOTTE NC 28226
(PHONE) 704-507-1814

NORRIS & TUNSTALL
CONSULTING ENGINEERS P.C.
902 MARKET STREET
WILMINGTON, NC 28401
PHONE (910) 343-9653
1420 ASH-LITTLE RIVER RD. NW
ASH, NC 28420
PHONE (910) 287-5900

Licence #C-3641

17039

DES. TJC
CKD. JST
DRWN. SLF
DATE: 10/02/2017

NORTH CAROLINA PROFESSIONAL SEAL 19851 ENGINEER DENNIS S. TUNSTALL

C2

F:\Projects\2017\17039 Holiday Inn Express\17039_Master.rvt-Key (C2-GRADING & DRAINAGE PLAN) Plotted on: Nov 08, 2017 - 11:21am by Cadenar

Drainage Areas

DA #	Drainage Area (sf)	Asphalt, Curb & Gutter	Concrete	Sidewalk	Building	Total Impervious
1	11,585	10,485	0	0	0	10,485
2	2,557	1,367	0	224	0	1,591
3	2,305	0	0	352	0	352
4	5,693	3,497	343	285	0	4,125
5	3,088	1,650	1,004	228	0	2,882
5A	488	0	0	156	0	156
6	20,039	17,401	0	861	0	18,262
7	5,435	4,800	0	100	0	4,900
8	11,388	7,530	753	741	0	9,024
8A	15,592	0	0	0	15,592	15,592

LEGEND

- PROPOSED BUILDING FOOTPRINT
- PROPOSED CURB AND GUTTER
- PROPERTY BOUNDARY
- STREET YARD SETBACKS
- ZONE SETBACKS
- EXISTING CONTOUR
- DISTURBED LIMITS
- TSF — TEMPORARY SILT FENCE
- SD — STORM PIPE
- ROOF DRAIN PIPE
- HANDICAP LOADING/CROSSING
- ROCK CONSTRUCTION ENTRANCE
- HC — HANDICAP PARKING STALL
- (4) — PARKING COUNT
- PROPOSED HANDICAP RAMP
- ONE WAY

For each open utility cut of City streets, a $325 permit shall be required from the City prior to occupancy and/or project acceptance.

CITY OF WILMINGTON NORTH CAROLINA
Public Services • Engineering Division
APPROVED STORMWATER MANAGEMENT PLAN
Date:_____ Permit #_____
Signed: _____

Approved Construction Plan

	Name	Date
Planning		
Traffic		
Fire		

NCDENR PWSS WATER PERMIT #: _____
WATER CAPACITY: _____GPD
DWQ SEWER PERMIT #: _____
SEWER CAPACITY: _____GPD
SEWER SHED # AND PLANT: _____
SEWER TO FLOW THROUGH NEI: YES or NO (CIRCLE ONE)

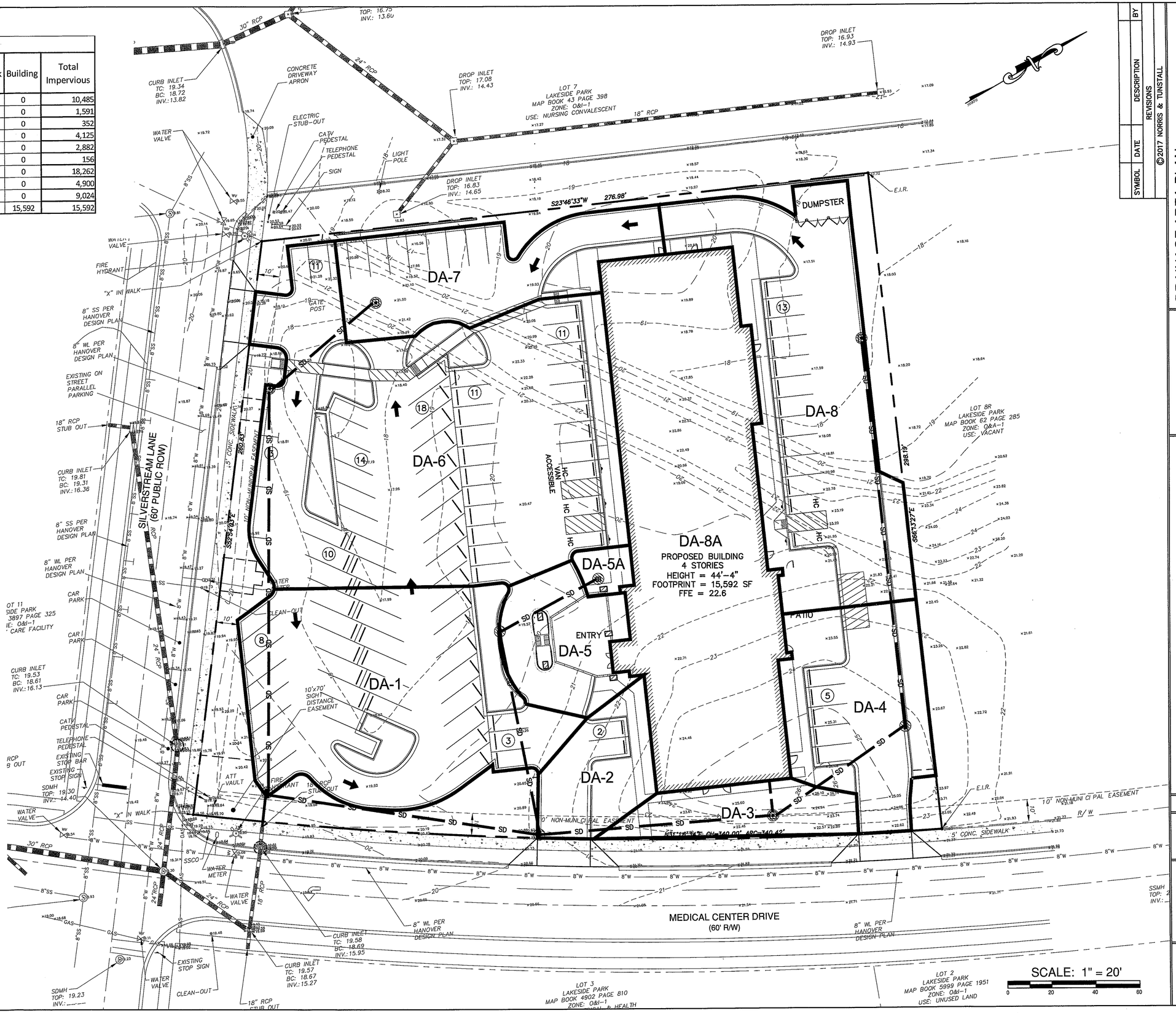

SYMBOL | DATE | DESCRIPTION | BY
REVISIONS
©2017 NORRIS & TUNSTALL

DRAINAGE AREA PLAN
HOLIDAY INN EXPRESS AND SUITES
839 MEDICAL CENTER DRIVE
WILMINGTON, N. C.

DEVELOPER
MANJULA/KALUWALIA, MANAGER
6508 SILVER MAPLE WAY, LLC
CHARLOTTE, NC 28226
(PHONE) 704-607-1814

NORRIS & TUNSTALL
CONSULTING ENGINEERS P.C.
902 MARKET STREET
WILMINGTON, NC 28401
PHONE (910) 343-0653
1429 ASH-LITTLE RIVER RD. NW
ASH, NC 28420
PHONE (910) 287-5900

Licence #C-3641

17039

DES. TJC
CKD. JST
DRWN. SLF
DATE: 10/02/2017

NORTH CAROLINA PROFESSIONAL SEAL 19851 ENGINEER JOHN S. TUNSTALL

C3

F:\Projects\2017\17039 Holiday Inn Express\17039 Plans\dwg\17039_Jackson-rev4.dwg (C3-DRAINAGE AREA PLAN) Plotted on: Nov 08, 2017 - 11:24am by Cdauser

LEGEND

- PROPOSED BUILDING FOOTPRINT
- PROPOSED CURB AND GUTTER
- PROPERTY BOUNDARY
- STREET YARD SETBACKS
- ZONE SETBACKS
- EXISTING CONTOUR
- DISTURBED LIMITS
- TSF — TEMPORARY SILT FENCE
- SD — STORM PIPE
- ROOF DRAIN PIPE
- HANDICAP LOADING/CROSSING
- ROCK CONSTRUCTION ENTRANCE
- HC — HANDICAP PARKING STALL

FIRE DEPARTMENT NOTES:

1. IN ADDITION TO THE STANDARD COMMENTS, ADDITIONAL FIRE PROTECTION AND ACCESSIBILITY REQUIREMENTS MAY BE REQUIRED DUE TO ANY SPECIAL CIRCUMSTANCES CONCERNING THE PROJECT.

2. ALL ISOLATION VALVES WITHIN THE "HOT BOX" SHALL BE ELECTRICALLY SUPERVISED. PLEASE WORK CLOSELY WITH YOUR FIRE SPRINKLER AND ALARM INSTALLER IN REGARDS TO RUNNING WIRE FOR TAMPER SWITCH.

For each open utility cut of City streets, a $325 permit shall be required from the City prior to occupancy and/or project acceptance.

CITY OF WILMINGTON NORTH CAROLINA
Public Services • Engineering Division
APPROVED STORMWATER MANAGEMENT PLAN
Date:_____ Permit #_____
Signed: _____

Approved Construction Plan

	Name	Date
Planning		
Traffic		
Fire		

NCDENR PWSS WATER PERMIT #: _____
WATER CAPACITY: _____GPD
DWQ SEWER PERMIT #: _____
SEWER CAPACITY: _____GPD
SEWER SHED # AND PLANT: _____
SEWER TO FLOW THROUGH NEI: YES or NO (CIRCLE ONE)

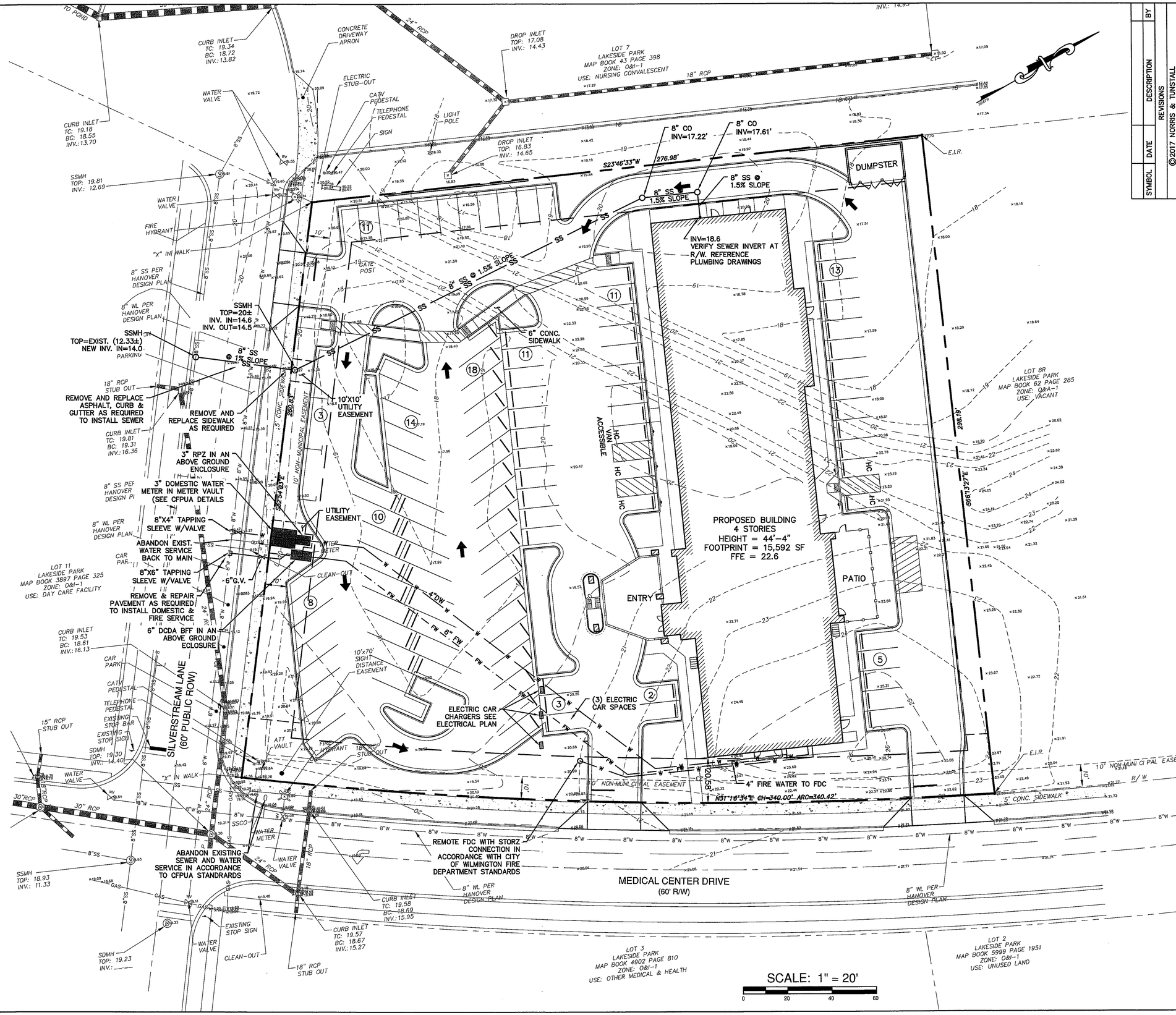

SYMBOL	DATE	DESCRIPTION	BY
		REVISIONS	

©2017 NORRIS & TUNSTALL

UTILITY PLAN
HOLIDAY INN EXPRESS AND SUITES
839 MEDICAL CENTER DRIVE
WILMINGTON, N. C.

DEVELOPER
MANJULA AHLUWALIA, MANAGER
KISMET WILMINGTON, LLC
5135 SUNSTAR CREEK
CHARLOTTE, NC 28226
(PHONE) 704-607-1814

NORRIS & TUNSTALL
CONSULTING ENGINEERS P.C.
902 MARKET STREET
WILMINGTON, NC 28401
PHONE (910) 343-0653
1429 ASH-LITTLE RIVER RD. NW
ASH, NC 28420
PHONE (910) 287-5900

Licence #C-3641

17039

DES. TJC
CKD. JST
DRWN. SLF

DATE: 10/02/2017

NORTH CAROLINA PROFESSIONAL SEAL 19851 ENGINEER JOHN S. TUNSTALL

C4

K:\Projects\2017\17039 Holiday Inn Express\17039 Plans\dwg\17039_Master-rev.dwg (C4-UTILITY PLAN) Plotted on: Nov 07, 2017 - 11:00am by Cadaver

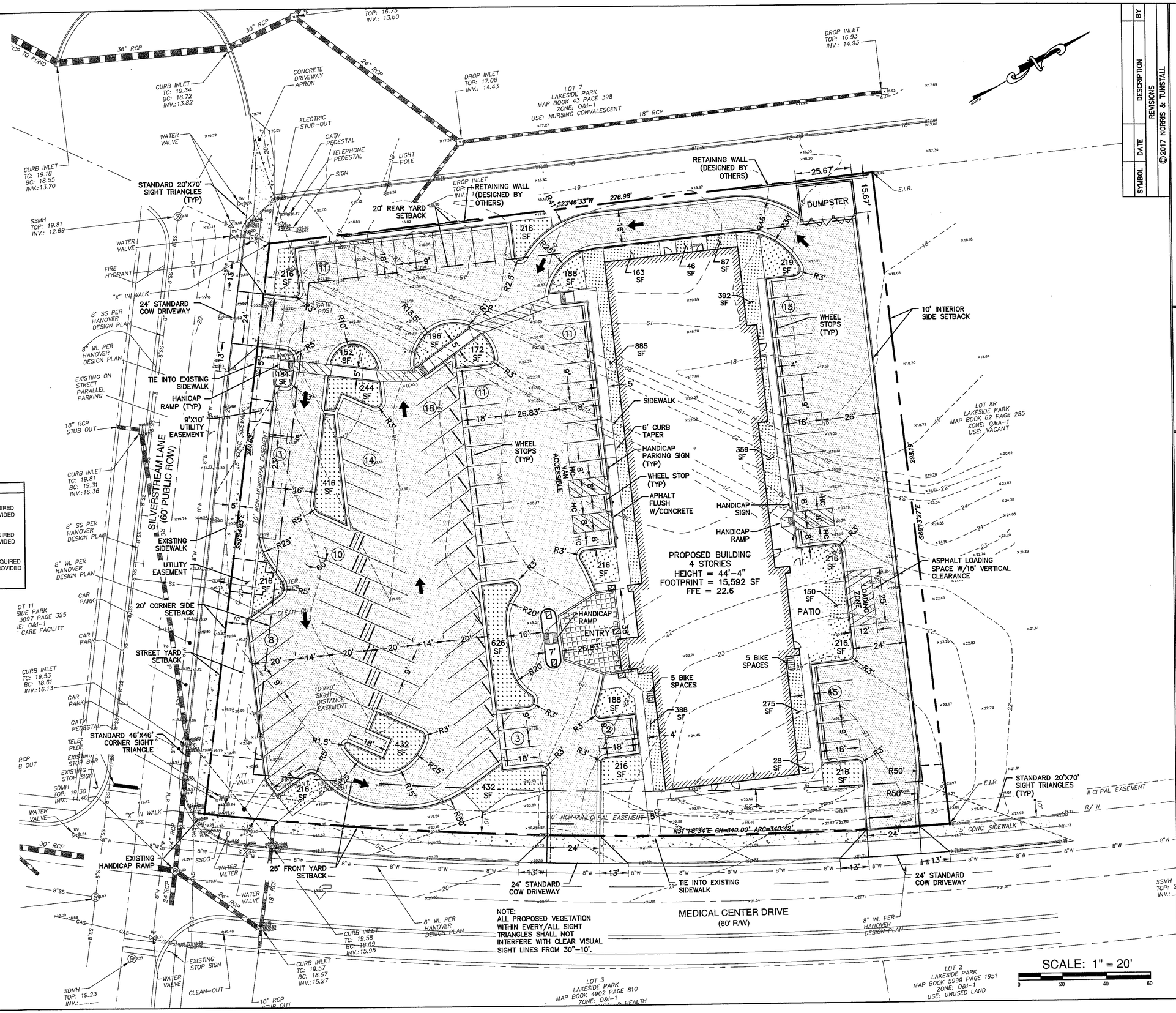

FOUNDATION PLANTING CALCULATIONS

BUILDING FRONT = 241' LENGTH - 10' OPENINGS = 321' (LENGTH) X 44' (HEIGHT) X .12 (12%) = 1,220 SF REQUIRED
1,273 SF PROVIDED

BUILDING NORTH SIDE = 61' LENGTH - 6.5' OPENINGS = 54.5' (LENGTH) X 44' (HEIGHT) X .12 (12%) = 287 SF REQUIRED
296 SF PROVIDED

BUILDING REAR = 241' LENGTH - 14.21' OPENINGS = 226.79' (LENGTH) X 44' (HEIGHT) X .12 (12%)= 1,197 SF REQUIRED
1,204 SF PROVIDED

BUILDING SOUTH SIDE = FOUNDATION PLANTINGS NOT REQUIRED

For each open utility cut of City streets, a $325 permit shall be required from the City prior to occupancy and/or project acceptance.

CITY OF WILMINGTON NORTH CAROLINA
Public Services • Engineering Division
APPROVED STORMWATER MANAGEMENT PLAN
Date:_____ Permit #_____
Signed:_____

Approved Construction Plan

	Name	Date
Planning		
Traffic		
Fire		

NCDENR PWSS WATER PERMIT #: _____
WATER CAPACITY: _____GPD
DWQ SEWER PERMIT #: _____
SEWER CAPACITY: _____GPD
SEWER SHED # AND PLANT: _____
SEWER TO FLOW THROUGH NEI: YES or NO (CIRCLE ONE)

SYMBOL	DATE	DESCRIPTION	BY
		REVISIONS	

©2017 NORRIS & TUNSTALL

LAYOUT PLAN
HOLIDAY INN EXPRESS AND SUITES
839 MEDICAL CENTER DRIVE
WILMINGTON, N. C.

DEVELOPER
MANUJA CHUVWALA, MANAGER
KISMET WILMINGTON, LLC
5518 SUNSTAR COURT
CHARLOTTE, NC 28226
(PHONE) 704-507-1814

NORRIS & TUNSTALL
CONSULTING ENGINEERS P.C.
1429 ASH-LITTLE RIVER RD. NW
ASH, NC 28420
PHONE (910) 287-5900
902 MARKET STREET
WILMINGTON, NC 28401
PHONE (910) 343-9653

Licence #C-3641

17039

DES. TJC
CKD. JST
DRWN. SLF
DATE: 10/02/2017

NORTH CAROLINA PROFESSIONAL SEAL 19851 ENGINEER JOHN S. TUNSTALL

C5

F:\Projects\2017\17039 Holiday Inn Express\17039 Plans\dwg\17039_Master.rev4.dwg (C5-LAYOUT PLAN) Plotted on: Nov 07, 2017 - 10:52am by Cadserr

NOTE: INSTALLATION OF NEW 24" CURB AND GUTTER ALONG ANY COW OR NCDOT STREET SHALL REQUIRE A 6" ABC STONE BASE.

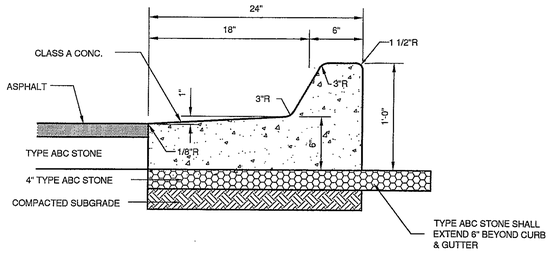

NOTE: CURB TYPE DEPENDS ON GRADES SHOWN ON GRADING PLAN. GRADES INDICATING FALL AWAY FROM CURB SHALL BE SPILL OFF TYPE CURB. GRADES INDICATING CURB ACCEPTING FLOW SHALL BE FLOW LINE TYPE.

NOT TO SCALE

1 24" CURB AND GUTTER SECTION (SPILL-OFF)

NOTE: INSTALLATION OF NEW 24" CURB AND GUTTER ALONG ANY COW OR NCDOT STREET SHALL REQUIRE A 6" ABC STONE BASE.

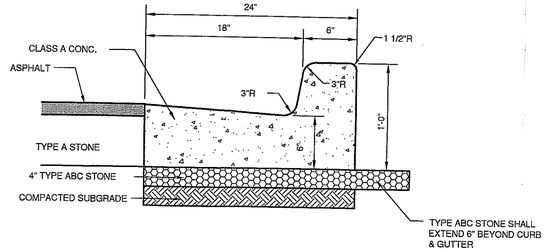

NOTE: CURB TYPE DEPENDS ON GRADES SHOWN ON GRADING PLAN. GRADES INDICATING FALL AWAY FROM CURB SHALL BE SPILL OFF TYPE CURB. GRADES INDICATING CURB ACCEPTING FLOW SHALL BE FLOW LINE TYPE.

NOT TO SCALE

2 24" CURB AND GUTTER SECTION (FLOW-LINE)

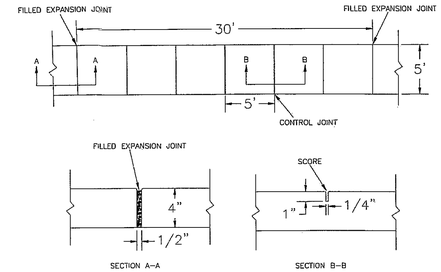

NOTES:

1. JOINT MATERIAL TO COMPLY WITH CURRENT NCDOT STANDARDS.
2. SANITARY SEWER CLEAN-OUTS, WATER METERS, MANHOLES, AND VALVE LIDS TO BE LOCATED OUTSIDE SIDEWALK WHERE FEASIBLE.
3. MINIMUM SIDEWALK WIDTH TO BE 6' MINIMUM IF PLACED AT BACK OF CURB.
4. CONCRETE FOR ALL SIDEWALKS (EXCEPT ANY PORTION CONTAIN WITHIN A DRIVEWAY APRON) SHALL BE CLASS "A" – 3,000 PSI.
5. MINIMUM REPLACEMENT FOR REPAIRS IS A 5' X 5' PANEL.
6. 4" STONE BASE MAY BE REQUIRED FOR POOR SOIL CONDITIONS
7. MINIMUM DEPTH FOR TUNNELING BELOW SIDEWALK IS 12"
8. MAX ADJACENT GROUND SLOPE WITHOUT RAILING IS 2:1
9. MIN GRADE FOR PROPER DRAINAGE IS 1% IN AT LEAST 1 DIRECTION. MAX CROSS SLOPE IS 2%. MAX LONGITUDINAL SLOPE IS 8.3%, 10% IF LIMITED BY EXISTING CONDITIONS, OR NO GREATER THAN THE SLOPE OF THE EXISTING ADJACENT ROAD.

NOT TO SCALE

3 STANDARD SIDEWALK DETAIL

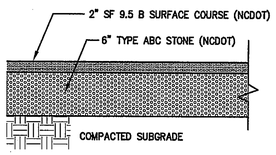

NOTE: PAVEMENT SECTION MAY VARY DEPENDING UPON FIELD CONDITIONS. CONTRACTOR SHALL COORDINATE w/OWNER & GEOTECHNICAL ENGINEER TO DETERMINE ACTUAL PAVEMENT SECTION.

4 LIGHT DUTY ASPHALT PAVEMENT SECTION

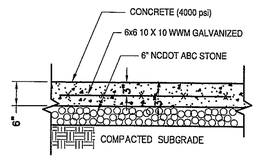

NOTES:
1. CONTROL JOINTS SHALL BE EVERY 15 FT. (MAX.) AND EXPANSION JOINTS SHALL BE EVERY 50 FT. (MAX).

2. PAVEMENT SECTION MAY VARY DEPENDING UPON FIELD CONDITIONS. THE PAVING CONTRACTOR SHALL COORDINATE WITH OWNER REPRESENTATIVE AND GEOTECHNICAL ENGINEER TO DETERMINE ACTUAL PAVEMENT SECTION.

NOT TO SCALE

5 HEAVY DUTY CONCRETE PAVEMENT SECTION

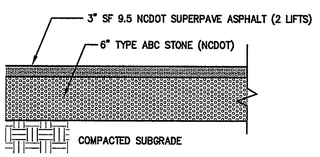

NOTE: PAVEMENT SECTION MAY VARY DEPENDING UPON FIELD CONDITIONS. CONTRACTOR SHALL COORDINATE w/OWNER & GEOTECHNICAL ENGINEER TO DETERMINE ACTUAL PAVEMENT SECTION.

NOT TO SCALE

6 HEAVY DUTY ASPHALT PAVEMENT SECTION

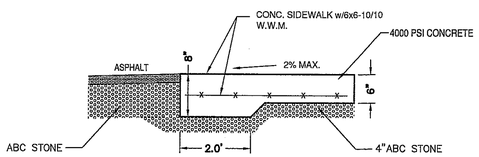

NOT TO SCALE

7 CONCRETE WALK FLUSH WITH ASPHALT

EROSION CONTROL NOTES AND MAINTENANCE PLAN:

1. ALL EROSION AND SEDIMENT CONTROL MEASURES WILL BE CHECKED FOR STABILITY AND OPERATION FOLLOWING EVERY RUNOFF-PRODUCING RAINFALL, BUT IN NO CASE, LESS THAN ONCE EVERY WEEK AND WITHIN 24 HOURS OF EVERY HALF-INCH RAINFALL.

2. ALL POINTS OF EGRESS WILL HAVE CONSTRUCTION ENTRANCES THAT WILL BE PERIODICALLY TOP-DRESSED WITH AN ADDITIONAL 2 INCHES OF #4 STONE TO MAINTAIN PROPER DEPTH. THEY WILL BE MAINTAINED IN A CONDITION TO PREVENT MUD OR SEDIMENT FROM LEAVING THE SITE. IMMEDIATELY REMOVE OBJECTIONABLE MATERIAL SPILLED WASHED OR TRACKED ONTO THE CONSTRUCTION ENTRANCE OR ROADWAYS.

3. SEDIMENT WILL BE REMOVED FROM HARDWARE CLOTH AND GRAVEL INLET PROTECTION, BLOCK AND GRAVEL INLET PROTECTION, ROCK DOUGHNUT INLET PROTECTION AND ROCK PIPE INLET PROTECTION WHEN THE DESIGNED STORAGE CAPACITY HAS BEEN HALF FILLED WITH SEDIMENT. ROCK WILL BE CLEANED OR REPLACED WHEN THE SEDIMENT POOL NO LONGER DRAINS AS DESIGNED. DEBRIS WILL BE REMOVED FROM THE ROCK AND HARDWARE CLOTH TO ALLOW PROPER DRAINAGE. SILT SACKS WILL BE EMPTIED ONCE A WEEK AND AFTER EVERY RAIN EVENT. SEDIMENT WILL BE REMOVED FROM AROUND WATTLES, BEAVER DAMS, DANDY SACKS AND SOCKS ONCE A WEEK AND AFTER EVERY RAIN EVENT.

4. DIVERSION DITCHES WILL BE CLEANED OUT IMMEDIATELY TO REMOVE SEDIMENT OR OBSTRUCTIONS FROM THE FLOW AREA. THE DIVERSION RIDGES WILL ALSO BE REPAIRED. SWALES MUST BE TEMPORARILY STABILIZED WITHIN 21 CALENDAR DAYS OF CEASE OF ANY PHASE OF ACTIVITY ASSOCIATED WITH A SWALE.

5. SEDIMENT WILL BE REMOVED FROM BEHIND THE SEDIMENT FENCE WHEN IT BECOMES HALF FILLED. THE SEDIMENT FENCE WILL BE REPAIRED AS NECESSARY TO MAINTAIN A BARRIER. STAKES MUST BE STEEL. STAKE SPACING WILL BE 6 FEET MAX. WITH THE USE OF EXTRA STRENGTH FABRIC, WITHOUT WIRE BACKING. STAKE SPACING WILL BE 8 FEET MAX. WHEN STANDARD STRENGTH FABRIC AND WIRE BACKING ARE USED. IF ROCK FILTERS ARE DESIGNED AT LOW POINTS IN THE SEDIMENT FENCE, THE ROCK WILL BE REPAIRED OR REPLACED IF IT BECOMES HALF-FULL OF SEDIMENT, NO LONGER DRAINS AS DESIGNED OR IS DAMAGED.

6. SEDIMENT WILL BE REMOVED FROM SEDIMENT TRAPS WHEN THE DESIGNED STORAGE CAPACITY HAS BEEN HALF FILLED WITH SEDIMENT. THE ROCK WILL BE CLEANED OR REPLACED WHEN THE SEDIMENT POOL NO LONGER DRAINS OR WHEN THE ROCK IS DISLODGED. BAFFLES WILL BE REPAIRED OR REPLACED IF THEY COLLAPSE, TEAR, DECOMPOSE OR BECOME INEFFECTIVE. THEY WILL BE REPLACED PROMPTLY. SEDIMENT WILL BE REMOVED WHEN DEPOSITS REACH HALF THE HEIGHT OF THE 1ST BAFFLE. FLOATING SKIMMERS WILL BE INSPECTED AND KEPT CLEAN WEEKLY.

7. SEDIMENT WILL BE REMOVED FROM THE SEDIMENT BASIN WHEN THE DESIGN STORAGE CAPACITY HAS BEEN HALF FILLED WITH SEDIMENT. ROCK WILL BE CLEANED OR REPLACED WHEN THE SEDIMENT POOL NO LONGER DRAINS OR IF THE ROCK IS DISLODGED. BAFFLES WILL BE REPAIRED OR REPLACED IF THEY COLLAPSE, TEAR, DECOMPOSE OR BECOME INEFFECTIVE. THEY WILL BE REPLACED PROMPTLY. SEDIMENT WILL BE REMOVED FROM BAFFLES WHEN DEPOSITS REACH HALF THE HEIGHT OF THE 1ST BAFFLE. FLOATING SKIMMERS WILL BE INSPECTED WEEKLY AND WILL BE KEPT CLEAN.

8. LAND QUALITY REQUIRES:
ALL SEEDED AREAS WILL BE FERTILIZED, RESEEDED AS NECESSARY, AND MULCHED, ACCORDING TO SPECIFICATIONS IN THE VEGETATIVE PLAN, TO MAINTAIN A VIGOROUS, DENSE VEGETATIVE COVER. ALL SLOPES WILL BE STABILIZED WITHIN 21 CALENDAR DAYS. ALL OTHER AREAS WILL BE STABILIZED WITHIN 14 WORKING DAYS.

WATER QUALITY REQUIRES:
ALL SEEDED AREAS WILL BE FERTILIZED, RESEEDED AS NECESSARY AND MULCHED ACCORDING TO SPECIFICATIONS IN THE VEGETATIVE PLAN TO MAINTAIN A VIGOROUS, DENSE VEGETATIVE COVER. ALL PERIMETER DIKES, SWALES, DITCHES, PERIMETER VERTICAL (3:1) AND ALL ' HORIZONTAL TO 1 'SLOPES, ALL SLOPES STEEPER THAN 3 HIGH QUALITY WATER (HQW) ZONES SHALL BE PROVIDED TEMPORARY OR PERMANENT STABILIZATION WITH GROUND COVER AS SOON AS PRACTICABLE BUT IN ANY EVENT WITHIN SEVEN (7) CALENDAR DAYS FROM THE LAST LAND-DISTURBING ACTIVITY. ALL OTHER DISTURBED AREAS SHALL BE PROVIDED TEMPORARY OR PERMANENT STABILIZATION WITH GROUND COVER AS SOON AS PRACTICABLE BUT IN ANY EVENT WITHIN FOURTEEN (14) CALENDAR DAYS FROM THE LAST LAND-DISTURBING ACTIVITY.

9. FLOCCULANTS WILL BE USED TO ADDRESS TURBIDITY ISSUES. THE PUMPS, TANKS, HOSES AND INJECT SYSTEMS WILL BE CHECKED FOR PROBLEMS OR TURBID DISCHARGES DAILY.

10. BASIN OUTLET STRUCTURES AND SKIMMERS SHALL WITHDRAW WATER FROM THE SURFACE.

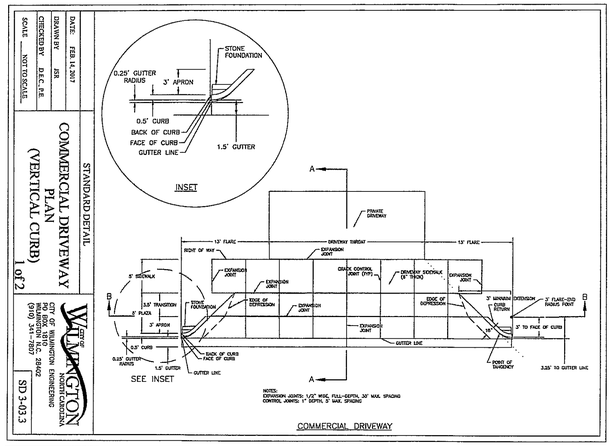

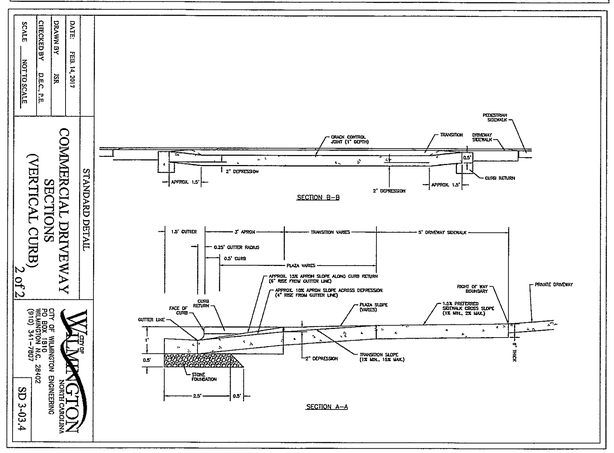

For each open utility cut of City streets, a $325 permit shall be required from the City prior to occupancy and/or project acceptance.

CITY OF WILMINGTON NORTH CAROLINA
Public Services • Engineering Division
APPROVED DRAINAGE PLAN
Date:_____ Permit #_____
Signed: _____

Approved Construction Plan

	Name	Date
Planning		
Traffic		
Fire		

NCDENR PWSS WATER PERMIT #: _____
WATER CAPACITY: _____GPD
DWQ SEWER PERMIT #: _____
SEWER CAPACITY: _____GPD
SEWER SHED # AND PLANT: _____
SEWER TO FLOW THROUGH NEI: YES or NO (CIRCLE ONE)

CITY OF WILMINGTON STANDARD NOTES:

1. CONTACT THE NORTH CAROLINA ONE CALL CENTER PRIOR TO DOING ANY DIGGING AT 1-800-632-4949.

2. PRIOR TO ANY CLEARING, GRADING OR CONSTRUCTION ACTIVITY, TREE PROTECTION FENCING WILL BE INSTALLED AROUND PROTECTED TREES OR GROVES OF TREES AND NO CONSTRUCTION WORKERS, TOOLS, MATERIALS, OR VEHICLES ARE PERMITTED WITHIN THE TREE PROTECTION FENCING;

3. ALL PAVEMENT MARKINGS IN PUBLIC RIGHTS-OF-WAY AND FOR DRIVEWAYS ARE TO BE THERMOPLASTIC AND MEET CITY AND/OR NCDOT STANDARDS.

4. ALL PARKING STALL MARKINGS AND LANE ARROWS WITHIN THE PARKING AREAS SHALL BE WHITE.

5. INSTALL REFLECTORS PER CITY AND NCDOT STANDARDS. TRAFFIC ENGINEERING MUST APPROVE OF PAVEMENT MARKING LAYOUT PRIOR TO ACTUAL STRIPING.

6. ALL TRAFFIC CONTROL SIGNS AND MARKINGS OFF THE RIGHT-OF-WAY ARE TO BE MAINTAINED BY THE PROPERTY OWNER IN ACCORDANCE WITH MUTCD STANDARDS.

7. TRAFFIC CONTROL DEVICES (INCLUDING SIGNS AND PAVEMENT MARKINGS) IN AREAS OPEN TO PUBLIC TRAFFIC ARE TO MEET MUTCD (MANUAL ON UNIFORM TRAFFIC CONTROL DEVICES) STANDARDS.

8. IT SHALL BE THE RESPONSIBILITY OF THE SUBDIVIDER TO ERECT OFFICIAL STREET NAME SIGNS AT ALL INTERSECTIONS ASSOCIATED WITH THE SUBDIVISION IN ACCORDANCE WITH THE TECHNICAL STANDARDS AND SPECIFICATIONS MANUAL. THE SUBDIVIDER MAY ACQUIRE AND ERECT OFFICIAL STREET NAME SIGNS OR MAY CHOOSE TO CONTRACT WITH THE CITY TO INSTALL THE STREET SIGNS AND THE SUBDIVIDER SHALL PAY THE COST OF SUCH INSTALLATION. CONTACT TRAFFIC ENGINEERING AT 341-7888 TO DISCUSS INSTALLATION OF TRAFFIC AND STREET NAME SIGNS. POSTED STREET NAMES MUST BE APPROVED PRIOR TO INSTALLATION OF STREET NAME SIGNS.

9. CONTACT TRAFFIC ENGINEERING AT 341-7888 FORTY-EIGHT HOURS PRIOR TO ANY EXCAVATION IN THE RIGHT-OF-WAY.

10. A UTILITY CUT PERMIT IS REQUIRED FOR EACH OPEN CUT OF A CITY STREET. CONTACT 341-5888 FOR MORE DETAILS. IN CERTAIN CASES AN ENTIRE RESURFACING OF THE AREA BEING OPEN CUT MAY BE REQUIRED.

11. ANY BROKEN OR MISSING SIDEWALK PANELS, DRIVEWAY PANELS, AND CURBING WILL BE REPLACED.

12. CONTACT TRAFFIC ENGINEERING AT 341-7888 TO DISCUSS STREET LIGHTING OPTIONS.

13. PROJECT SHALL COMPLY WITH CFPUA CROSS CONNECTION CONTROL REQUIREMENTS. WATER METER(S) CANNOT BE RELEASED UNTIL ALL REQUIREMENTS ARE MET AND THE STATE HAS GIVEN THEIR FINAL APPROVAL. CALL 343-3910 FOR INFORMATION.

14. IF THE CONTRACTOR DESIRES CFPUA WATER FOR CONSTRUCTION HE SHALL APPLY IN ADVANCE FOR THIS SERVICE AND MUST PROVIDE A REDUCED PRESSURE ZONE (RPZ) BACKFLOW PREVENTION DEVICE ON THE DEVELOPER'S SIDE OF THE WATER METER BOX.

15. ANY IRRIGATION SYSTEM SUPPLIED BY CFPUA WATER SHALL COMPLY WITH CFPUA CROSS CONNECTION CONTROL REGULATIONS. CALL 332-6558 FOR INFORMATION.

16. ANY BACKFLOW PREVENTION DEVICES REQUIRED BY CFPUA WILL NEED TO BE ON THE LIST OF APPROVED DEVICES BY USCFCCCHR OR ASSE.

17. WHEN PVC WATER MAINS AND/OR POLYETHYLENE SERVICES ARE PROPOSED, THE PIPES ARE TO BE MARKED WITH NO. 10 INSULATED SINGLE STRAND COPPER WIRE INSTALLED THE ENTIRE LENGTH AND SECURED TO ALL VALVES. THIS WIRE IS TO BE ACCESSIBLE AT ALL FIRE HYDRANTS AND WATER METER BOXES TO AID IN FUTURE LOCATION OF FACILITIES.

18. THE NUMBER AND SPACING OF DRIVEWAYS FOR ALL INTERCONNECTED SITES WILL BE DETERMINED BY THE COMBINED FRONTAGE OF THE INTERCONNECTED PROPERTIES.

19. UNDERGROUND FIRE LINE MUST BE PERMITTED AND INSPECTED BY THE WILMINGTON FIRE DEPARTMENT FROM THE PUBLIC ROW TO THE BUILDING. CONTACT THE WILMINGTON FIRE DEPARTMENT DIVISION OF FIRE AND LIFE SAFETY AT 910-343-0696 FOR ADDITIONAL INFORMATION.

20. A LANDSCAPE PLAN INDICATING THE LOCATION OF REQUIRED STREET TREES SHALL BE SUBMITTED TO THE CITY OF WILMINGTON TRAFFIC ENGINEER DIVISION AND PARKS AND RECREATIN DEPARTMENT FOR REVIEW AND APPROVAL PRIOR TO THE RECORDING OF THE FINAL PLAT.

21. IF AND IRRIGATION SYSTEM IS PLANNED FOR THE SITE, UTILIZE MOISTURE SENSORS.

22. ALL PROPOSED VEGETATION WITHIN THE SIGHT TRIANGLES SHALL NOT INTERFERE WITH CLEAR VISUAL SIGHT LINES FROM 30"-10'.

23. PLEASE CONSIDER INCORPORATING XERIC LANDSCAPING FOR ALL NEW LANDSCAPING.

24. THE CONTRACTOR WILL MAINTAIN ALL-WEATHER EMERGENCY ACCESS TO CONSTRUCTION SITE AT ALL TIMES.

UTILITY NOTES FOR FIRE HYDRANTS:

1. FIRE HYDRANTS MUST BE WITHIN 150' OF THE FIRE DEPARTMENT CONNECTION.

2. THE FIRE DEPARTMENT CONNECTION MUST BE WITHIN 40' OF FIRE APPARATUS PLACEMENT.

3. LANDSCAPING AND PARKING CANNOT BLOCK OR IMPEDE THE FIRE DEPARTMENT CONNECTIONS OR FIRE HYDRANTS. A 3' CLEAR SPACE SHALL BE MAINTAINED AROUND THE CIRCUMFERENCE OF THE FIRE HYDRANT CONNECTION AND THE FIRE HYDRANT.

4. FIRE HYDRANTS MUST BE LOCATED WITHIN 8' OF THE CURB.

5. NEW HYDRANTS MUST BE AVAILABLE FOR USE PRIOR TO CONSTRUCTION OF THE BUILDINGS.

6. NEW HYDRANTS MUST BE BROUGHT INTO SERVICE PRIOR TO COMBUSTIBLE MATERIALS BEING DELIVERED TO THE JOB SITE.

7. THE CONTRACTOR SHALL MAINTAIN AN ALL WEATHER ACCESS FOR EMERGENCY VEHICLES AT ALL TIMES DURING CONSTRUCTION.

8. TEMPORARY STREET SIGNS SHALL BE INSTALLED AT EACH STREET INTERSECTION WHEN CONSTRUCTION OF NEW ROADWAYS ALLOWS PASSAGE BY VEHICLES.

9. UNDERGROUND FIRE LINE AND PRIVATE WATER MAINS MUST BE PERMITTED AND INSPECTED BY THE WILMINGTON FIRE DEPARTMENT FROM THE PUBLIC RIGHT-OF-WAY TO THE BUILDING. CONTACT THE WILMINGTON FIRE DEPARTMENT DIVISION OF FIRE AND LIFE SAFETY AT 910-343-0696 FOR ADDITIONAL INFORMATION.

10. A MINIMUM OF 5' SHALL SEPARATE UNDERGROUND FIRE LINES OR PRIVATE WATER MAINS FROM OTHER UNDERGROUND UTILITIES.

11. HYDRANTS SHALL BE OF SUFFICIENT NUMBERS TO ACCOMMODATE BASE FIRE FLOW REQUIREMENTS OF THE STRUCTURE.

12. BUILDING CONSTRUCTION TYPE: VA

CALL 811 (3) WORKING DAYS BEFORE YOU DIG.

SYMBOL	DATE	DESCRIPTION	BY
		REVISIONS	

©2017 NORRIS & TUNSTALL

DETAILS AND NOTES
HOLIDAY INN EXPRESS AND SUITES
839 MEDICAL CENTER DRIVE
WILMINGTON, N. C.

DEVELOPER
MANJULA AHLUWALIA, MANAGER
KISMET WILMINGTON, LLC
5518 SUNSTAR COURT
CHARLOTTE, NC 28226
(PHONE) 704-507-1814

NORRIS & TUNSTALL
CONSULTING ENGINEERS P.C.
1429 ASH-LITTLE RIVER RD. NW
ASH, NC 28420
PHONE (910) 287-5900
902 MARKET STREET
WILMINGTON, NC 28401
PHONE (910) 343-9633

Licence #C-3641

17039

DES. TJC
CKD. JST
DRWN. SLF

DATE: 10/02/2017

NORTH CAROLINA PROFESSIONAL SEAL 19851 ENGINEER JOHN S. TUNSTALL

D1

f:\Projects\2017\7039 Holiday Inn Express\7039 Plans\dwg\7039_Master-rev4.dwg (01-DETAILS) Plotted on: Nov 03, 2017 - 2:21pm by Cadaver

1 SILT SACK DETAIL

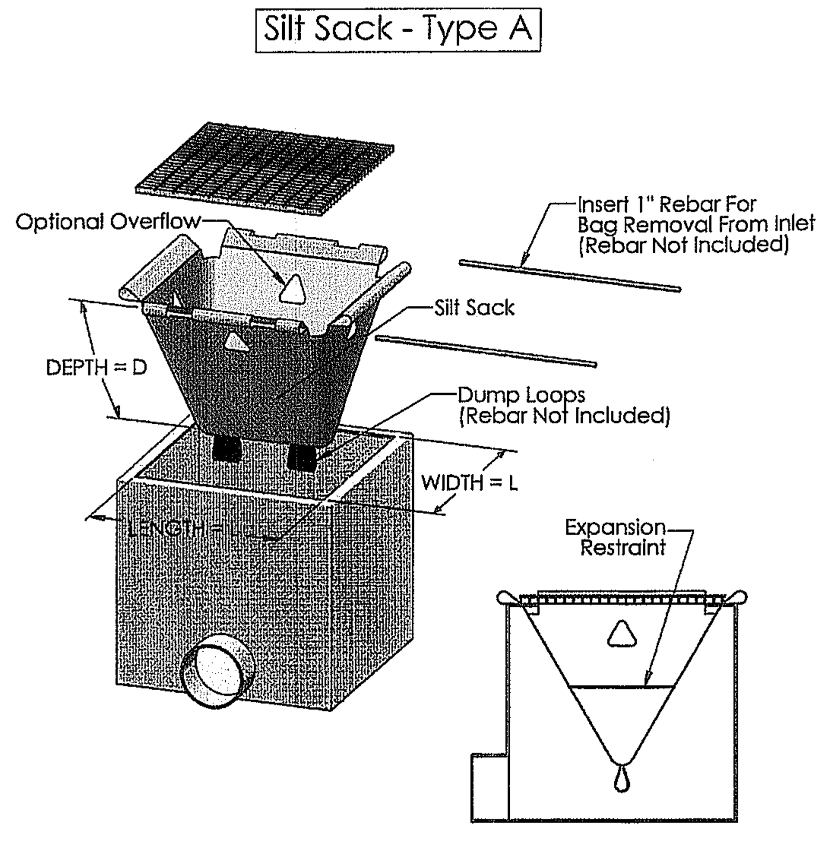

SILT SACK NOTES

1. THE CONTRACTOR IS RESPONSIBLE FOR FIELD VERIFYING THE OPENING SIZE OF THE EXISTING OR PROPOSED CATCH BASIN OR DROP INLET. THE SILTSACK WILL BE MANUFACTURED TO FIT THE OPENING OF THE EXISTING OR PROPOSED CATCH BASIN OR DROP INLET.

2. TO INSTALL THE SILTSACK IN THE CATCH BASIN, REMOVE THE GRATE AND PLACE THE SACK IN THE OPENING. HOLD OUT APPROXIMATELY SIX INCHES OF THE SACK OUTSIDE THE FRAME. THIS IS THE AREA OF THE LIFTING STRAPS. REPLACE THE GRATE TO HOLD THE SACK IN PLACE.

3. THE SILTSACK IS FULL AND SHOULD BE EMPTIED WHEN THE RESTRAINT CORD IS NO LONGER VISIBLE.

4. TO REMOVE THE SILTSACK, TAKE TWO PIECES OF 1" DIAMETER REBAR AND PLACE THROUGH THE LIFTING LOOPS ON EACH SIDE OF THE SACK TO FACILITATE THE LIFTING OF THE SILTSACK.

5. TO EMPTY THE SILTSACK, PLACE IT WHERE THE CONTENTS WILL BE COLLECTED. PLACE THE REBAR THROUGH THE LIFT STRAPS (CONNECTED TO THE BOTTOM OF THE SACK) AND LIFT. THIS WILL TURN THE SILTSACK INSIDE OUT AND EMPTY THE CONTENTS. CLEAN OUT AND RINSE. RETURN THE SILTSACK TO ITS ORIGINAL SHAPE AND PLACE BACK IN THE BASIN.

NOT TO SCALE

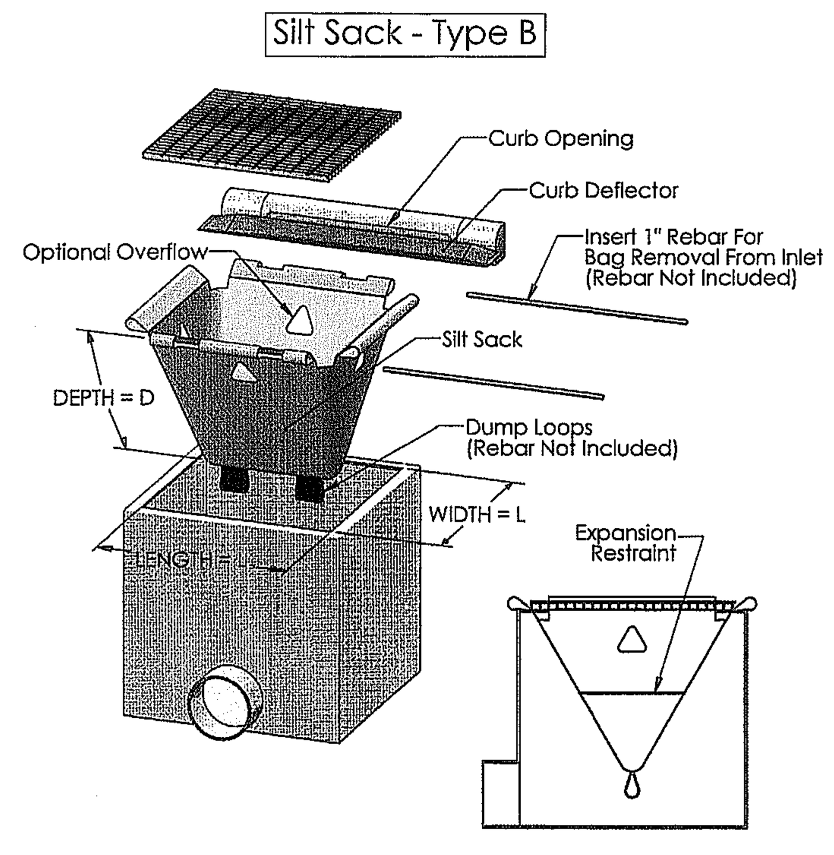

NOT TO SCALE

2 ENERGY DISSIPATOR

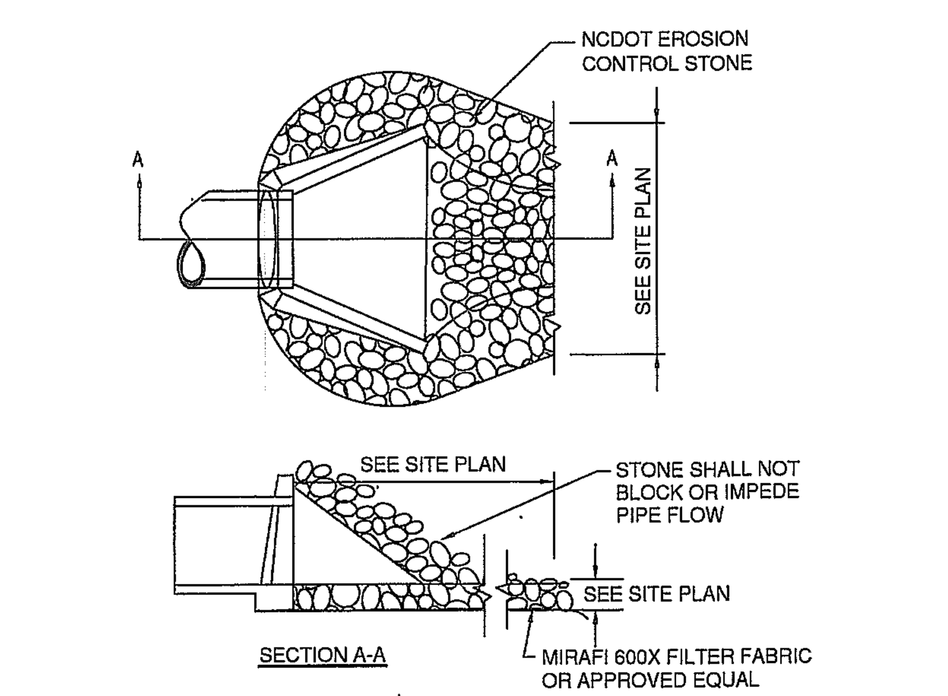

NOTE: FILTER FABRIC AND STONE SHALL BE TOED UNDER FLARED END SECTION

NOT TO SCALE

3 TEMPORARY SILT FENCE

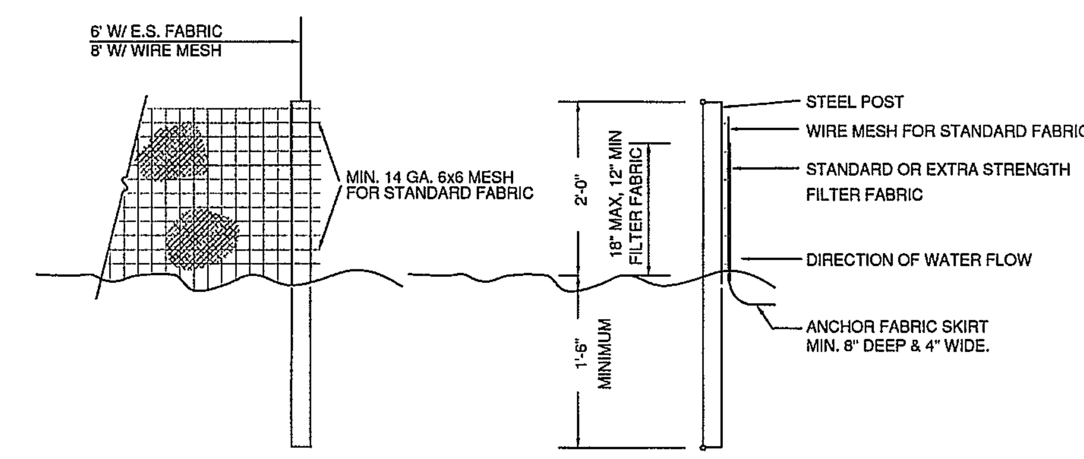

NOTES:

1. SYN. FENCE FABRIC SHALL BE MIN. OF 30" IN WIDTH WITH 30 LB/IN TENSILE STRENGTH FOR STANDARD FABRIC AND 50 LB/IN FOR EXTRA STRENGTH.
2. FABRIC SHALL BE CONTINUOUS LENGTH. IF JOINTS ARE NECESSARY, LAP FABRIC POST TO POST.
3. STEEL POST SHALL BE MIN 4' IN HEIGHT AND BE OF THE SELF-FASTENER STEEL ANGLE TYPE.

NOT TO SCALE

3 HARDWARE CLOTH AND GRAVEL INLET PROTECTION

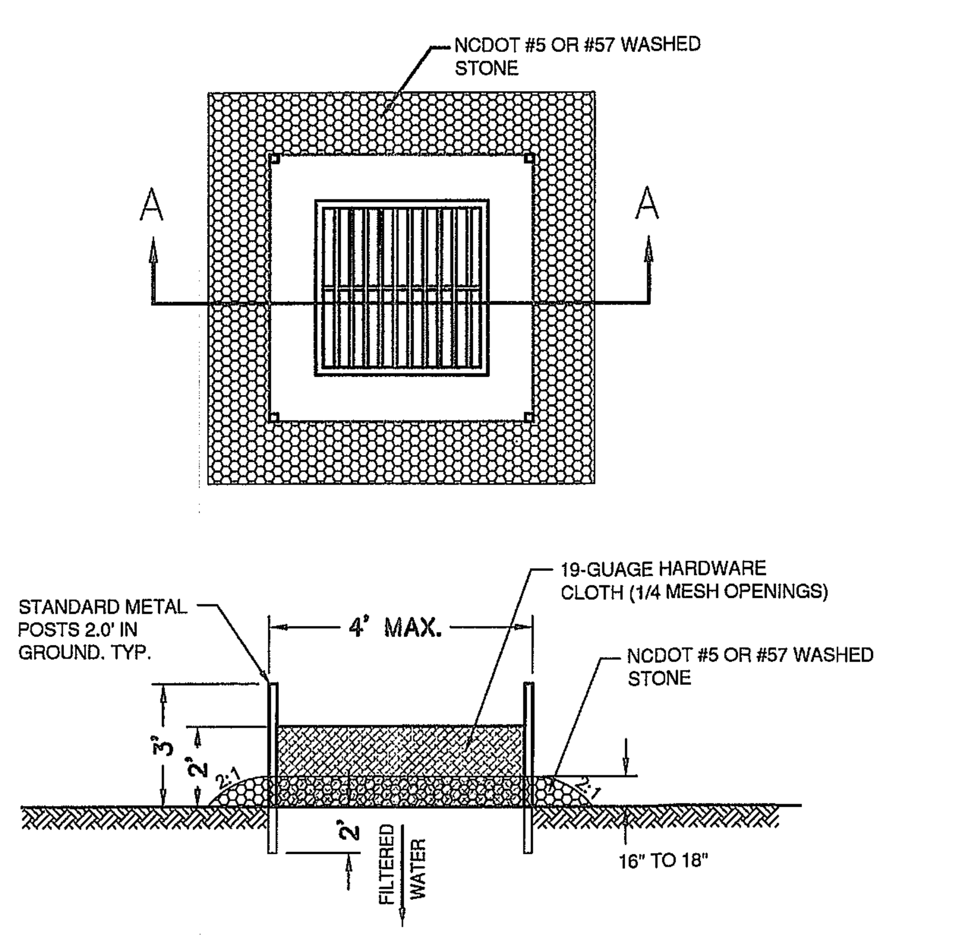

CONSTRUCTION SEQUENCE:
1. UNIFORMLY GRADE A SHALLOW DEPRESSION APPROACHING THE INLET.
2. DRIVE 5' STEEL POST 2' INTO THE GROUND SURROUNDING THE INLET. SPACE POST EVENLY AROUND THE PERIMETER OF THE INLET, A MAXIMUM OF 4' APART.
3. SURROUND THE POST WITH WIRE MESH HARDWARE CLOTH. SECURE THE WIRE MESH TO THE STEEL POST AT THE TOP, MIDDLE AND BOTTOM. PLACING A 2' FLAP OF THE WIRE MESH UNDER THE GRAVEL FOR ANCHORING IS RECOMMENDED.
4. PLACE CLEAN GRAVEL (NCDOT #5 OR #57 STONE) ON A 2:1 SLOPE WITH A HEIGHT OF 16" TO 18" AROUND THE WIRE, AND SMOOTH TO AN EVEN GRADE.
5. ONCE THE CONTRIBUTING DRAINAGE AREA HAS BEEN STABILIZED, REMOVE ACCUMULATED SEDIMENT, AND ESTABLISH FINAL GRADING ELEVATIONS.
6. COMPACT THE AREA PROPERLY AND STABILIZE IT WITH GROUNDCOVER.

MAINTENANCE:
INSPECT INLETS AT LEAST WEEKLY AND AFTER EACH SIGNIFICANT (1/2 INCH OR GREATER) RAINFALL EVENT. CLEAR THE MESH WIRE OF ANY DEBRIS OR OTHER OBJECTS TO PROVIDE ADEQUATE FLOW FOR SUBSEQUENT RAINS. TAKE CARE NOT TO DAMAGE OR UNDERCUT THE WIRE MESH DURING SEDIMENT REMOVAL. REMOVE SEDIMENT WHEN ACCUMULATION REACHES HALF THE DEPTH OF ROCK. REPLACE STONE WHEN IT NO LONGER DRAINS AS DESIGNED.

NOT TO SCALE

TEMPORARY SEEDING RECOMMENDATIONS

LATE WINTER & EARLY SPRING

SEEDING MIXTURE

SPECIES	RATE (lb/acre)
RYE (GRAIN)	120
ANNUAL LESPEDEZA (KOBE IN PIEDMONT AND COASTAL PLAIN, KOREAN IN MOUNTAINS)	50

OMIT ANNUAL LESPEDEZA WHEN DURATION OF TEMPORARY COVER IS NOT TO EXTEND BEYOND JUNE.

SEEDING DATES:
MOUNTAINS - ABOVE 2,500 FEET: FEB. 15 - MAY 15
BELOW 2,500 FEET: FEB. 1 - MAY 1
PIEDMONT - JAN. 1 - MAY 1
COASTAL PLAIN - DEC. 1 - APRIL 15

SOIL AMENDMENTS:
FOLLOW RECOMMENDATIONS OF SOIL TESTS OR APPLY 2,000 lb/acre GROUND AGRICULTURAL LIMESTONE AND 750 lb/acre 10-10-10 FERTILIZER.

MULCH:
APPLY 4,000 lb/acre STRAW. ANCHOR STRAW BY TACKING WITH ASPHALT, NETTING, OR A MULCH ANCHORING TOOL. A DISK WITH BLADES SET NEARLY STRAIGHT CAN BE USED AS A MULCH ANCHORING TOOL.

MAINTENANCE:
REFERTILIZE IF GROWTH IS NOT FULLY ADEQUATE. RESEED, REFERTILIZE AND MULCH IMMEDIATELY FOLLOWING EROSION OR OTHER DAMAGE.

SUMMER

SEEDING MIXTURE

SPECIES	RATE (lb/acre)
GERMAN MILLET	40

IN THE PIEDMONT AND MOUNTAINS, A SMALL-STEMMED SUDANGRASS MAY BE SUBSTITUTED AT A RATE OF 50 lb/acre.

SEEDING DATES:
MOUNTAINS - MAY 15 - AUG. 15
PIEDMONT - MAY 1 - AUG. 15
COASTAL PLAIN - APR. 15 - AUG. 15

SOIL AMENDMENTS:
FOLLOW RECOMMENDATIONS OF SOIL TESTS OR APPLY 2,000 lb/acre GROUND AGRICULTURAL LIMESTONE AND 750 lb/acre 10-10-10 FERTILIZER.

MULCH:
APPLY 4,000 lb/acre STRAW. ANCHOR STRAW BY TACKING WITH ASPHALT, NETTING, OR A MULCH ANCHORING TOOL. A DISK WITH BLADES SET NEARLY STRAIGHT CAN BE USED AS A MULCH ANCHORING TOOL.

MAINTENANCE:
REFERTILIZE IF GROWTH IS NOT FULLY ADEQUATE. RESEED, REFERTILIZE AND MULCH IMMEDIATELY FOLLOWING EROSION OR OTHER DAMAGE.

FALL

SEEDING MIXTURE

SPECIES	RATE (lb/acre)
RYE (GRAIN)	120

SEEDING DATES:
MOUNTAINS - AUG. 15 - DEC. 15
COASTAL PLAIN AND PIEDMONT - AUG. 15 - DEC. 15

SOIL AMENDMENTS:
FOLLOW SOIL TEST OR APPLY 2,000 lb/acre GROUND AGRICULTURAL LIMESTONE AND 1,000 lb/acre 10-10-10 FERTILIZER.

MULCH:
APPLY 4,000 lb/acre STRAW. ANCHOR STRAW BY TACKING WITH ASPHALT, NETTING, OR A MULCH ANCHORING TOOL. A DISK WITH BLADES SET NEARLY STRAIGHT CAN BE USED AS A MULCH ANCHORING TOOL.

MAINTENANCE:
REPAIR AND REFERTILIZE DAMAGE AREAS IMMEDIATELY. TOP DRESS WITH 50 lb/acre OF NITROGEN IN MARCH, IF IT IS NECESSARY TO EXTEND TEMPORARY COVER BEYOND JUNE 15, OVERSEED WITH 50 lb/acre KOBE (PIEDMONT AND COASTAL PLAIN) OR KOREAN (MOUNTAINS) LESPEDEZA IN LATE FEBRUARY OR EARLY MARCH.

PERMANENT SEEDING RECOMMENDATIONS

FALL & EARLY SPRING

SEEDING MIXTURE

SPECIES	RATE (lb/acre)	
TALL FESCUE	80	1.84
PENSACOLA BAHIAGRASS	50	1.15
SERICEA LESPEDEZA	30	0.69
KOBE LESPEDEZA	10	0.23

SEEDING NOTES:
1. FROM SEPT. 1 THRU MAR. 1, USE UNSCARIFIED SERICEA SEED.
2. ON POORLY DRAINED SITES OMIT SERICEA AND INCREASE KOBE TO 30 lbs/acre.
3. WHERE A NEAT APPEARANCE IS DESIRED, OMIT SERICEA AND INCREASE KOBE TO 40 lbs/acre.

NURSE PLANTS: BETWEEN APR. 15 AND AUG. 15, ADD 10 lbs/acre GERMAN MILLET OR 15 lbs/acre SUDANGRASS. PRIOR TO MAY 1 OR AFTER AUG. 15 ADD 25 lbs/acre RYE (GRAIN).

SEEDING DATES:	BEST	POSSIBLE
EARLY SPRING:	FEB 15-MAR. 20	FEB.15-APR. 30
FALL:	SEPT. 1-SEPT. 30	SEPT. 1-OCT. 31

SOIL AMENDMENTS:
APPLY LIME AND FERTILIZE ACCORDING TO SOIL TESTS, OR APPLY 3,000-5,000 lbs/acre (68.9-114.8 lbs/1,000 sf) GROUND AGRICULTURAL LIMESTONE (USE THE LOWER RATE ON SANDY SOILS) AND 1,000 lbs/acre (22.9 lbs/1,000 sf) 10-10-10 FERTILIZER.

MULCH:
APPLY 4,000 lb/acre (91.8 lbs/1,000 sf) GRAIN STRAW OR EQUIVALENT COVER OF ANOTHER SUITABLE MULCH. ANCHOR STRAW BY TACKING WITH ASPHALT, NETTING, OR ROVING OR BY CRIMPING WITH A MULCH ANCHORING TOOL. A DISK WITH BLADES SET NEARLY STRAIGHT CAN BE USED AS A MULCH ANCHORING TOOL.

MAINTENANCE:
IF GROWTH IS LESS THAN FULLY ADEQUATE, REFERTILIZE IN THE SECOND YEAR, ACCORDING TO SOIL TESTS OR TOPDRESS WITH 500 lbs/acre (11.5 lbs/1,000 sf) 10-10-10 FERTILIZER. MOW AS NEEDED WHEN SERICEA IS OMITTED FROM THE MIXTURE. RESEED, FERTILIZE, AND MULCH DAMAGED AREAS IMMEDIATELY.

LATE SPRING & EARLY SUMMER

SEEDING MIXTURE

SPECIES	RATE (lb/acre)	
PENSACOLA BAHIAGRASS	50	1.15
SERICEA LESPEDEZA	30	0.69
COMMON BERMUDA	10	0.23
GERMAN MILLET	10	0.23

SEEDING NOTES:
1. WHERE A NEAT APPEARANCE IS DESIRED, OMIT SERICEA.
2. USE COMMON BERMUDAGRASS ONLY ON ISOLATED SITES WHERE IT CANNOT BECOME A PEST. BERMUDAGRASS MAY BE REPLACED WITH 5 lbs/acre CENTIPEDEGRASS.

SEEDING DATES:
APRIL 1-JULY 15

SOIL AMENDMENTS:
APPLY LIME AND FERTILIZE ACCORDING TO SOIL TESTS, OR APPLY 3,000 lbs/acre (68.9 lbs/1,000 sf) GROUND AGRICULTURAL LIMESTONE AND 500 lbs/acre (11.5 lbs/1,000 sf) 10-10-10 FERTILIZER.

MULCH:
APPLY 4,000 lb/acre (91.8 lbs/1,000 sf) GRAIN STRAW OR EQUIVALENT COVER OF ANOTHER SUITABLE MULCH. ANCHOR STRAW BY TACKING WITH ASPHALT, NETTING, OR ROVING OR BY CRIMPING WITH A MULCH ANCHORING TOOL. A DISK WITH BLADES SET NEARLY STRAIGHT CAN BE USED AS A MULCH ANCHORING TOOL.

MAINTENANCE:
REFERTILIZE THE FOLLOWING APRIL WITH 50 lbs/acre (1.15 lbs/1,000 sf) NITROGEN. REPEAT AS GROWTH REQUIRES. MAY BE MOWED ONLY ONCE A YEAR. WHERE A NEAT APPEARANCE IS DESIRED, OMIT SERICEA AND MOW AS OFTEN AS NEEDED.

CALL 811 (3) WORKING DAYS BEFORE YOU DIG.

For each open utility cut of City streets, a $325 permit shall be required from the City prior to occupancy and/or project acceptance.

CITY OF WILMINGTON NORTH CAROLINA
Public Services • Engineering Division
APPROVED DRAINAGE PLAN
Date:________ Permit #________
Signed: ________

Approved Construction Plan

	Name	Date
Planning		
Traffic		
Fire		

NCDENR PWSS WATER PERMIT #:	
WATER CAPACITY:	GPD
DWQ SEWER PERMIT #:	
SEWER CAPACITY:	GPD
SEWER SHED # AND PLANT:	
SEWER TO FLOW THROUGH NEI:	YES or NO (CIRCLE ONE)

NOTE:
THE CRITICAL ROOT ZONE (CRZ) OF A TREE IS WHERE THE MAJORITY OF A TREE'S ROOTS LAY. 85% OF MOST TREE ROOTS ARE FOUND IN THE TOP 24" OF THE SOIL AND SUPPLY THE MAJORITY OF NUTRIENTS AND WATER. GENERALLY, ROOTS SPREAD OUT 2-3X THE HEIGHT OF THE TREE.

NOTE:
CROWN OF THE TREE IS NEEDED FOR LEAF GROWTH TO PRODUCE OXYGEN, FILTER THE AIR, REDUCE WIND AND SOFTEN NOISE. DO NOT DISFIGURE CROWN WITH INTENSIVE PRUNING.

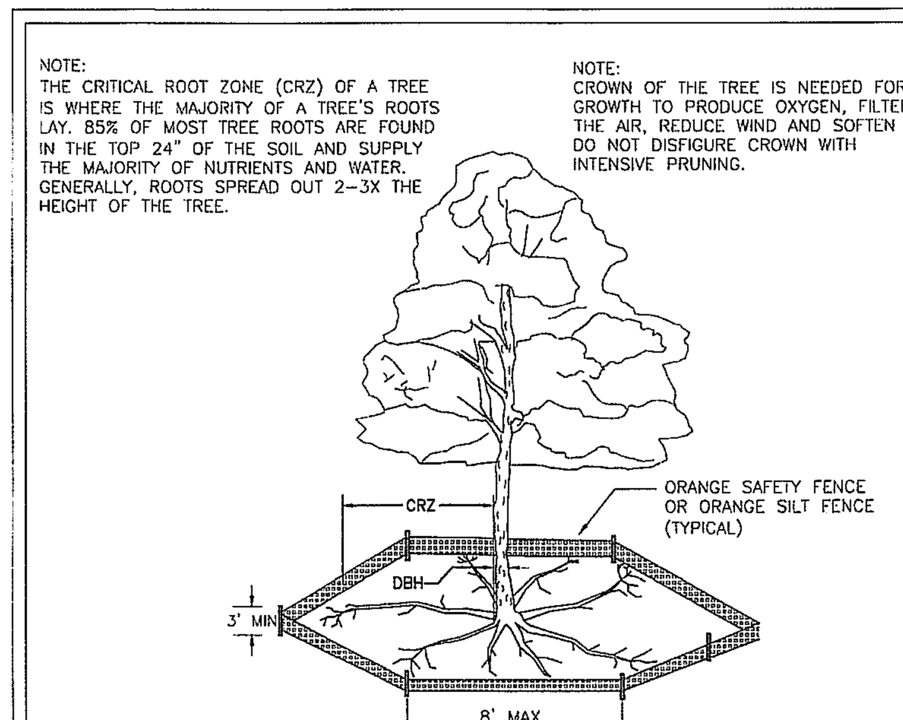

NOTES:
1. PROTECT CRITICAL ROOT ZONE (CRZ) OF TREES PRIOR TO CONSTRUCTION. CLEARLY MARK THE TREES AND ERECT A PROTECTIVE BARRIER AT THE CRZ. BARRIER SHALL BE MAINTAINED UNTIL CONSTRUCTION IS COMPLETE.
2. CRZ RADIUS IS 1 FT PER INCH OF TREE DIAMETER AT BREAST HEIGHT (DBH).
3. IF CONSTRUCTION OCCURS WITHIN THE CRZ, AT LEAST 12" OF MULCH AND/OR LOGGING MATTS SHALL BE PLACED WHERE MACHINERY MANEUVERS TO REDUCE SOIL COMPACTION IN THIS ZONE.
4. WHERE SIDEWALKS AND PATHWAYS PASS WITHIN CRZ, EXTRA CARE SHALL BE TAKEN TO AVOID DAMAGE TO THE ROOTS. ALTERNATE CONSTRUCTION METHODS, SUCH AS A REINFORCED SIDEWALK, SHALL BE IMPLEMENTED AS NECESSARY.
5. FOR ALL TREES, CUTTING OF LARGE STRUCTURAL ROOTS LOCATED NEAR THE BASE OF THE TRUNK IS PROHIBITED. DO NOT COMPACT SOIL BENEATH TREES. NO VEHICLE SHALL BE ALLOWED TO PARK UNDER TREES. NO MATERIALS OR EQUIPMENT SHALL BE STORED BENEATH TREES. DAMAGING THE BARK WITH LAWNMOWERS, CONSTRUCTION EQUIPMENT, OR ANYTHING ELSE IS PROHIBITED. CONTRACTOR SHALL REPAIR DAMAGE TO TREES.
6. FAILING TO INSTALL OR MAINTAIN PROTECTION MEASURES SHALL RESULT IN A STOP WORK ORDER AND FINE OF $500/DAY. DISTURBANCE OTHER THAN THAT ALLOWED ON THE APPROVED PLAN WILL REQUIRE OWNER TO POST A LETTER OF CREDIT FOR 3 YRS FOR TREE MITIGATION.

	STANDARD DETAIL	
DATE: JAN, 2015	TREE PROTECTION DURING CONSTRUCTION	CITY OF WILMINGTON NORTH CAROLINA
DRAWN BY JSR		CITY OF WILMINGTON ENGINEERING PO BOX 1810 WILMINGTON, NC 28402 (910) 341-7807
CHECKED BY RDG, P.E.		
SCALE NOT TO SCALE	SHEET 1 of 2	SD 15-09

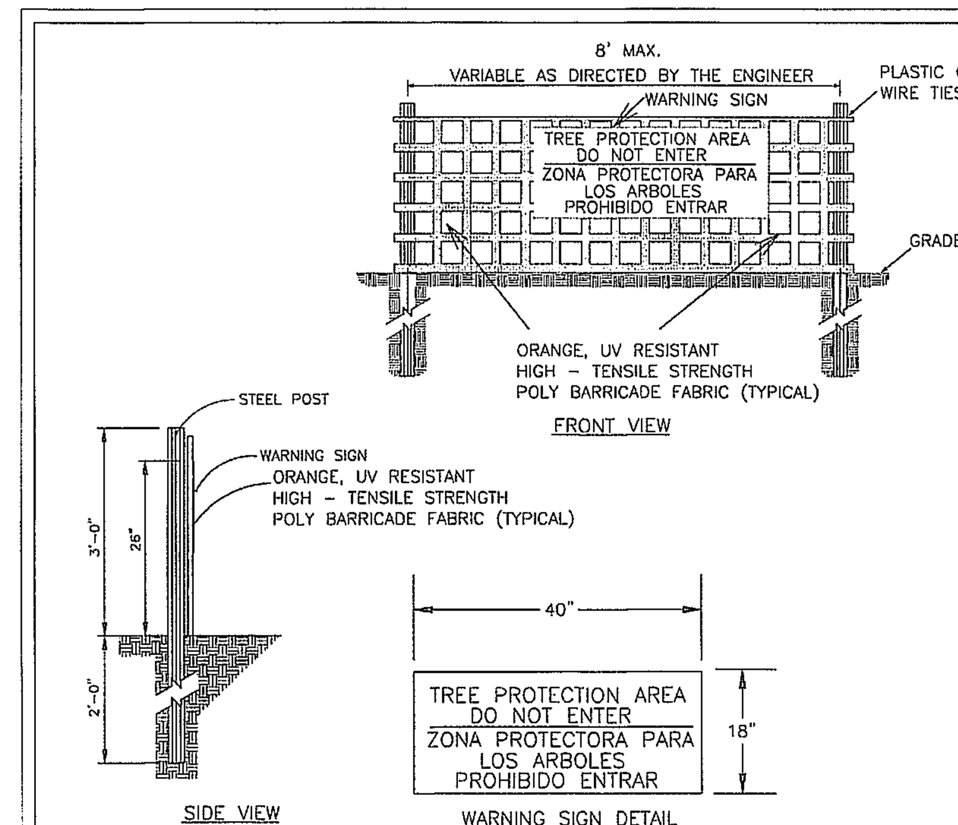

NOTES:
1. THE TREE PROTECTION FENCING SHALL NOT BE VIOLATED FOR THE ENTIRE DURATION OF THE PROJECT WITHOUT APPROVAL FROM URBAN FORESTRY STAFF.
2. WARNING SIGNS TO BE MADE OF DURABLE, WEATHERPROOF MATERIAL. LETTERS TO BE 3" HIGH, MINIMUM, CLEARLY LEGIBLE AND SPACED AS DETAILED.
3. SIGNS SHALL BE PLACED AT 50' MAXIMUM INTERVALS. PLACE A SIGN AT EACH END OF LINEAR TREE PROTECTION AND 50' ON CENTER THEREAFTER. FOR TREE PROTECTION AREAS LESS THAN 100' IN PERIMETER, PROVIDE NO LESS THAN TWO SIGNS PER PROTECTION AREA.
4. ATTACH SIGNS SECURELY TO FENCE POSTS AND FABRIC. MAINTAIN TREE PROTECTION FENCE AND SIGNS THROUGHOUT DURATION OF PROJECT.
5. TREE PROTECTION FENCING AND SIGNAGE SHALL BE REMOVED AFTER CONSTRUCTION.
6. ADDITIONAL SIGNS MAY BE REQUIRED BY CITY OF WILMINGTON, BASED ON ACTUAL FIELD CONDITIONS.

	STANDARD DETAIL	
DATE: JAN, 2015	TREE PROTECTION DURING CONSTRUCTION	CITY OF WILMINGTON NORTH CAROLINA
DRAWN BY JSR		CITY OF WILMINGTON ENGINEERING PO BOX 1810 WILMINGTON, NC 28402 (910) 341-7807
CHECKED BY RDG, P.E.		
SCALE NOT TO SCALE	SHEET 2 of 2	SD 15-09

SYMBOL	DATE	DESCRIPTION	BY
		REVISIONS	

©2017 NORRIS & TUNSTALL

DETAILS AND NOTES
HOLIDAY INN EXPRESS AND SUITES
839 MEDICAL CENTER DRIVE
WILMINGTON, N. C.

DEVELOPER
MANJULA AHLUWALIA, MANAGER
KISMET WILMINGTON, LLC
5518 SUNSTAR COURT
CHARLOTTE, NC 28226
(PHONE) 704-507-1814

NORRIS & TUNSTALL
CONSULTING ENGINEERS P.C.
902 MARKET STREET
WILMINGTON, NC 28401
PHONE (910) 343-9653
1429 ASH-LITTLE RIVER RD. NW
ASH, NC 28420
PHONE (910) 287-5900

Licence #C-3641

17039

DES. TJC
CKD. JST
DRWN. SLF

DATE: 10/02/2017

D2

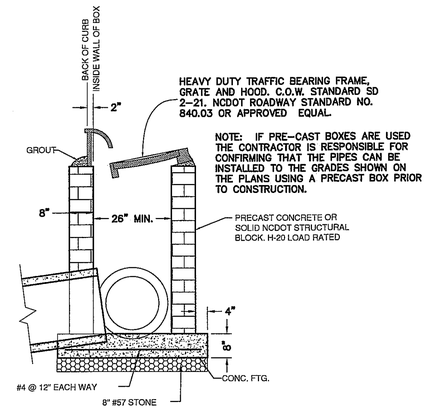

MUST COMPLY WITH CITY OF WILMINGTON STANDARDS

NOT TO SCALE

1 CATCH BASIN DETAIL

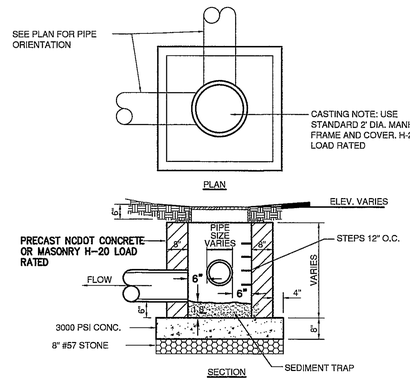

MUST COMPLY WITH CITY OF WILMINGTON STANDARDS

NOT TO SCALE

2 JUNCTION BOX DETAIL

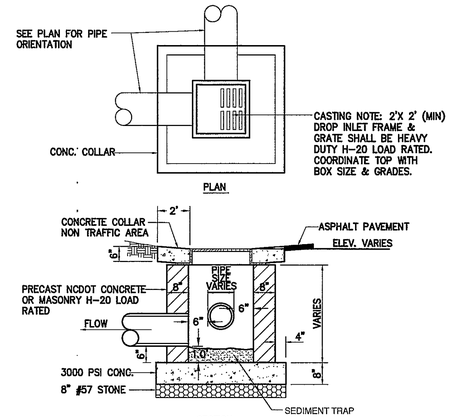

MUST COMPLY WITH CITY OF WILMINGTON STANDARDS

NOT TO SCALE

3 DROP INLET DETAIL

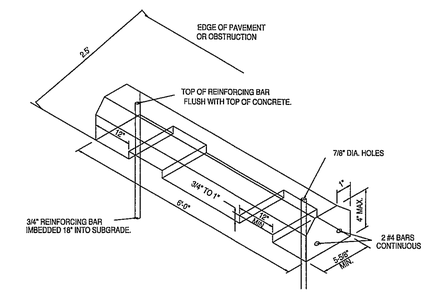

NOT TO SCALE

4 CONCRETE WHEEL STOPS

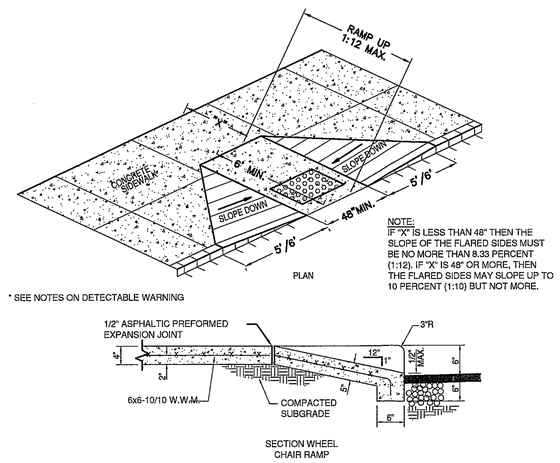

NOTE:
IF "X" IS LESS THAN 48" THEN THE SLOPE OF THE FLARED SIDES MUST BE NO MORE THAN 8.33 PERCENT (1:12). IF "X" IS 48" OR MORE, THEN THE FLARED SIDES MAY SLOPE UP TO 10 PERCENT (1:10) BUT NOT MORE.

* SEE NOTES ON DETECTABLE WARNING

NOT TO SCALE

5 SIDEWALK, CURB CUT AND WHEEL CHAIR RAMP DETAIL

NOTES:

1. 8.33% (12:1) MAX. RAMP SLOPE
2. CROSS SLOPE: 2.00%
3. CURB RAMPS REQUIRE A (4'-0") MIN. LANDING WITH A MAX. CROSS SLOPE AND LONGITUDINAL SLOPE OF 2.00% WHERE PEDESTRIANS PERFORM TURNING MANEUVERS. SLOPE TO DRAIN TO CURB.

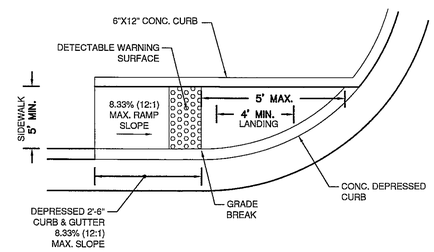

NOT TO SCALE

6 TYPE 1 CURB RAMP

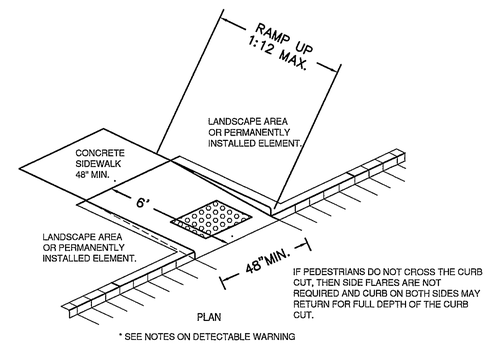

IF PEDESTRIANS DO NOT CROSS THE CURB CUT, THEN SIDE FLARES ARE NOT REQUIRED AND CURB ON BOTH SIDES MAY RETURN FOR FULL DEPTH OF THE CURB CUT.

* SEE NOTES ON DETECTABLE WARNING

NOT TO SCALE

7 SIDEWALK, CURB CUT AND WHEEL CHAIR RAMP DETAIL

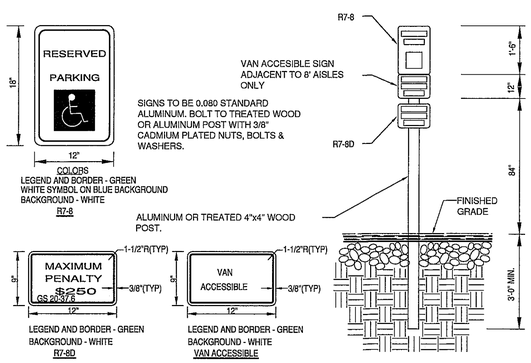

NOTE: HANDICAP SPACES SHALL CONFORM TO ADA REGULATIONS & SLOPE MUST NOT EXCEED 2% IN EACH DIRECTION

NOT TO SCALE

8 TYPICAL HANDICAPPED SIGN DETAIL

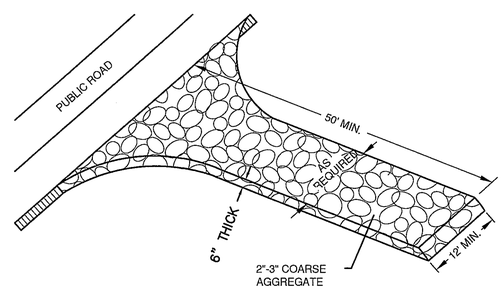

NOT TO SCALE

9 TEMPORARY GRAVELLED CONSTRUCTION ENTRANCE

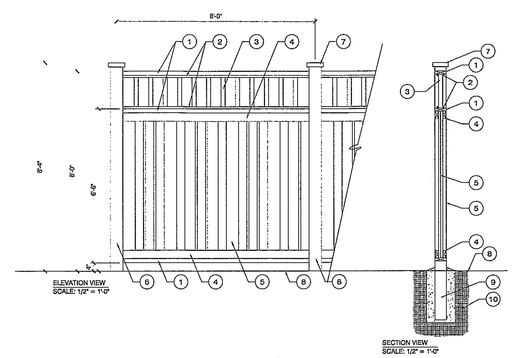

LEGEND

1. 2 x 6 CAP
2. 1 x 1 NAILER
3. 2 x 2 PICKET
4. 2 x 4 STRINGER
5. 1 x 6 VERTICAL BOARDS - 1" OVERLAP
6. 6 x 6 POSTS AT 8'-0" O.C.
7. DECORATIVE POST CAP
8. FINISH GRADE
9. CONCRETE FOOTING
10. COMPACTED SUBGRADE

NOTES:

- PAINT COLOR: TO BE SELECTED
- TREAT ALL EXPOSED SURFACES WITH (2) TWO COATS MOISTURE-PROOF PRIMER AND (2) COATS ENAMEL.
- ALL CONNECTORS, FASTENERS AND OTHER HARDWARE SHALL BE HOT DIPPED GALVANIZED

NOT TO SCALE

10 TRASH ENCLOSURE DETAIL

For each open utility cut of City streets, a $325 permit shall be required from the City prior to occupancy and/or project acceptance.

CITY OF WILMINGTON NORTH CAROLINA
Public Services • Engineering Division
APPROVED DRAINAGE PLAN
Date: _____ Permit #: _____
Signed: _____

Approved Construction Plan

	Name	Date
Planning		
Traffic		
Fire		

NCDENR PWSS WATER PERMIT #: _____
WATER CAPACITY: _____ GPD
DWG SEWER PERMIT #: _____
SEWER CAPACITY: _____ GPD
SEWER SHED # AND PLANT: _____
SEWER TO FLOW THROUGH NEI: YES or NO (CIRCLE ONE)

CALL 811 (3) WORKING DAYS BEFORE YOU DIG.

SYMBOL	DATE	DESCRIPTION	BY
		REVISIONS	

©2017 NORRIS & TUNSTALL

DETAILS AND NOTES

HOLIDAY INN EXPRESS AND SUITES
839 MEDICAL CENTER DRIVE
WILMINGTON, N. C.

DEVELOPER
MANJULA AHLUWALIA, MANAGER
KISMET WILMINGTON, LLC
5518 SUNSTAR COURT
CHARLOTTE, NC 28226
(PHONE) 704-507-1614

NORRIS & TUNSTALL
CONSULTING ENGINEERS P.C.
902 MARKET STREET
WILMINGTON, NC 28401
PHONE (910) 343-9653
1429 ASH-LITTLE RIVER RD. NW
ASH, NC 28420
PHONE (910) 287-5900

Licence #C-3641

17039

DES. TJC
CKD. JST
DRWN. NSB

DATE: 09/12/2017

NORTH CAROLINA PROFESSIONAL SEAL 19851 ENGINEER JOHN S. TUNSTALL

D3

P:\Projects\2017\17039 Holiday Inn Express\17039 Plans\dwg\17039_Master.rvt.dwg (03-DETAILS) Plotted on: Nov 03, 2017 - 2:23pm by Cdoster

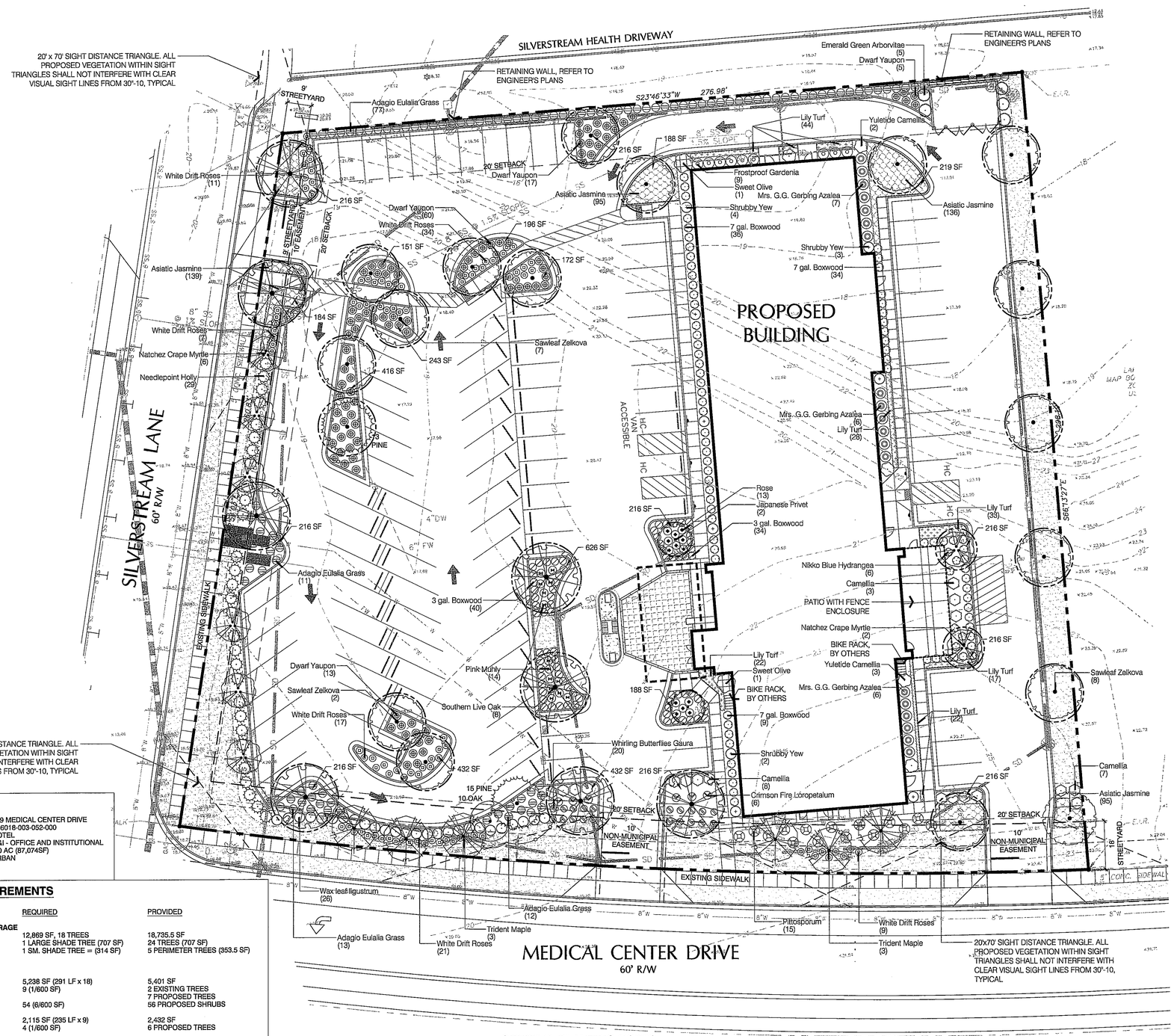

PLANT_SCHEDULE_OVERALL

TREES	BOTANICAL NAME / COMMON NAME	CONT	CAL	RANGE		QTY
	Acer buergerianum / Trident Maple	B & B	3" CAL	10-12` HT		6
	Existing Oak	EXISTING				1
	Existing Pine	EXISTING				2
	Lagerstroemia x `Natchez` / Natchez Crape Myrtle	B & B	3" CAL	10-12` HT		8
	Ligustrum japonicum / Japanese Privet	B & B	6` HT			2
	Quercus virginiana / Southern Live Oak	B & B	4" CAL	14-16` HT		8
	Thuja o. `Emerald Green` / Emerald Green Arborvitae	--		8` HT		5
	Zelkova serrata / Sawleaf Zelkova	B & B	3" CAL	10-12` HT		17
SHRUBS	**BOTANICAL NAME / COMMON NAME**	**SIZE**	**RANGE**			**QTY**
	Azalea i. `Mrs. G.G. Gerbing` / Mrs. G.G. Gerbing Azalea	3 gal	12-18" HT			19
	Buxus m. `Wintergreen` / 3 gal. Boxwood	3 gal	12-18" HT			74
	Buxus m. `Wintergreen` / 7 gal. Boxwood	7 gal	18-24" HT			79
	Camellia s. `Shishi-Gashira` / Camellia	--	36" HT MIN.			18
	Camellia s. `Yuletide` / Yuletide Camellia	7 gal	24-36" HT			5
	Gardenia j. `Frostproof` / Frostproof Gardenia	3 gal	18-24" HT			9
	Gaura lindheimeri `Whirling Butterflies` / Whirling Butterflies Gaura	3 gal				20
	Hydrangea m. `Nikko Blue` / Nikko Blue Hydrangea	3 gal	12-18" HT			6
	Ilex cornuta `Needlepoint` / Needlepoint Holly	--	36" HT MIN.			29
	Ilex v. `Nana` / Dwarf Yaupon	3 gal	12-15" HT			95
	Ligustrum j. `Recurvifolium` / Wax leaf ligustrum	--	36" HT MIN.			26
	Loropetalum chinense `Crimson Fire` / Crimson Fire Loropetalum	3 gal	15-18" HT			6
	Miscanthus s. `Adagio` / Adagio Eulalia Grass	3 gal	18-24" HT			113
	Muhlenbergia capillaris / Pink Muhly	3 gal	18-24" HT			14
	Osmanthus fragrans / Sweet Olive	10 gal	4-5` HT			2
	Pittosporum tobira / Pittosporum	3 gal	18-24" HT			15
	Podocarpus macrophyllus maki / Shrubby Yew	7 gal	3-4` HT			9
	Rosa x `Knockout` TM / Rose	3 gal	12-18" HT			13
	Rosa `Drift` White / White Drift Roses	3 gal				99
GROUND COVERS	**BOTANICAL NAME / COMMON NAME**	**SIZE**	**RANGE**		**SPACING**	**QTY**
	Liriope muscari / Lily Turf	1 quart	6-12" HT		18" o.c.	166
	Trachelospermum a. `Asiatic` / Asiatic Jasmine	1 qt	6-12" HT		20" o.c.	466
SOD/SEED	**BOTANICAL NAME / COMMON NAME**	**SIZE**	**RANGE**		**SPACING**	**QTY**
	Cynodon dactylon / Bermuda Grass	--				

SITE DATA

ADDRESS	839 MEDICAL CENTER DRIVE
PARCEL ID	R06018-003-052-000
PROPOSED USE	HOTEL
EXISTING ZONING	O&I - OFFICE AND INSTITUTIONAL
PARCEL AREA	2.0 AC (87,074SF)
CAMA LAND USE	URBAN

LANDSCAPE REQUIREMENTS

	REQUIRED	PROVIDED
PARKING LOT CANOPY COVERAGE		
(42,899 SF X 30%)	12,869 SF, 18 TREES 1 LARGE SHADE TREE (707 SF) 1 SM. SHADE TREE = (314 SF)	18,735.5 SF 24 TREES (707 SF) 5 PERIMETER TREES (353.5 SF)
STREET YARD PLANTING		
PRIMARY STREETYARD		
MEDICAL CENTER DRIVE	5,238 SF (291 LF x 18)	5,401 SF
TREES REQUIRED	9 (1/600 SF)	2 EXISTING TREES 7 PROPOSED TREES
SHRUBS REQUIRED	54 (6/600 SF)	56 PROPOSED SHRUBS
SILVERSTREAM LANE	2,115 SF (235 LF x 9)	2,432 SF
TREES REQUIRED	4 (1/600 SF)	6 PROPOSED TREES
SHRUBS REQUIRED	24 (6/600 SF)	26 PROPOSED SHRUBS
FOUNDATION PLANTING		
BUILDING FRONT (231 LF x 44 x .12)	1,220 SF	1,273 SF
NORTH (54.5 LF x 44 x .12)	287 SF	296 SF
BUILDING REAR (226.79 LF x 44 x .12)	1,197 SF	1,204 SF
SOUTH - NONE REQUIRED		

TREE REQUIREMENTS PER DISTURBED ACRE
15 TREES PER DISTURBED ACRE MUST BE RETAINED OR PLANTED ON SITE.

REQUIRED:	2.0 ACRES DISTURBED x 15 TREES = 30 TREES REQUIRED
PROVIDED:	8 TREES CREDITS FROM EXISTING TREES 41 TREES PROPOSED - REFER TO PLANTING LEGEND, THIS SHEET
TOTAL:	49 TREES PROVIDED

SYMBOL LEGEND

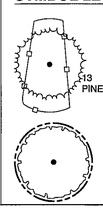

EXISTING TREES TO REMAIN WITH TREE PROTECTION FENCING

TREES COUNTED TOWARD PARKING LOT SHADE REQUIREMENTS

GENERAL PLANTING NOTES.

1. THIS WORK INCLUDES, BUT IS NOT LIMITED TO THE FURNISHING OF ALL LABOR, MATERIALS, EQUIPMENT, FINAL GRADING, SEEDING, SOIL AMENDMENTS, ETC., AS MAY BE REQUIRED FOR A COMPLETE INSTALLATION.
2. QUANTITIES SHOWN IN PLANT LISTS ARE FOR CONVENIENCE ONLY. PLANS SHALL GOVERN.
3. THE LANDSCAPE CONTRACTOR SHALL NOTIFY THE LANDSCAPE ARCHITECT OF ANY DISCREPANCIES IN PLANT LOCATIONS OR INSUFFICIENT PLANT QUANTITIES DUE TO DIFFERENCES IN PLAN AND ACTUAL FIELD CONDITIONS.
4. ALL TREE AND SHRUB MATERIAL SPECIFIED MUST MEET STANDARD INDUSTRY SPECIFICATIONS FOR THE CONTAINER SIZE INDICATED. DOWNSIZING OR SUBSTITUTION OF PLANT MATERIAL WITHOUT PRIOR APPROVAL OF LANDSCAPE ARCHITECT WILL NOT BE ALLOWED.
5. ALL LANDSCAPE AREAS SHALL BE GRADED TO A SMOOTH EVEN SURFACE PRIOR TO ANY PLANT INSTALLATION. ALL PLANT MATERIALS SHALL BE INSTALLED USING GOOD HORTICULTURAL PRACTICES IN ACCORDANCE WITH THE PLANS AND DETAILS.
6. TREES SHALL NOT BE PLANTED CLOSER THAN FOUR (4) FEET FROM ANY WALKWAY OR PUBLIC SIDEWALK EXCEPT WHERE TREE WELLS OR PARKWAYS ARE PROVIDED IN THE SIDEWALK AREA. ALL TREE PLANTED WITHIN FIVE (5) FEET OF WALKS OR PUBLIC UTILITIES SHALL RECEIVE DEEP ROOT BARRIERS.
7. TREE LOCATIONS SHOWN ON PLAN MAY REQUIRE ADJUSTMENT IN THE FIELD. WHENEVER FEASIBLE, TREES SHOULD BE PLANTED A MINIMUM OF TEN (10) FEET FROM ALL UNDERGROUND UTILITIES, STREETLIGHTS, HYDRANTS, AND OUT OF DRAINAGE FLOW LINES. SHOULD THIS NOT BE POSSIBLE, CONTACT THE LANDSCAPE ARCHITECT FOR DECISION ON PLACEMENT.
8. ALL TREES IN TURF AREAS SHALL HAVE 12" MIN. CLR. CIRCUMFERENCE AROUND THE TRUNK BASE. PROVIDE 2" MIN. THK. MULCH AT BASE OF TRUNK.
9. GROUNDCOVER TYPE SHOWN SHALL BE PLANTED IN ALL SHRUB AREAS AS SPECIFIED ON PLANS. GROUNDCOVER SHALL BE PLANTED AT 8" ON- CENTER UNIFORM TRIANGULAR SPACING, AND SHALL BE CONTINUOUS UNDER ALL TREE AND SHRUB MASSES AS SHOWN ON PLAN.
10. MATURE PLANTINGS SHALL NOT INTERFERE WITH UTILITIES AND TRAFFIC SIGHT LINES.
11. ALL PLANTING AREAS SHALL BE MULCHED WITH PINESTRAW, EXCEPT FOR AREAS PLANTED WITH GROUNDCOVER. ALL AREAS PLANTED WITH GROUNDCOVER SHALL BE MULCHED WITH HARDWOOD MULCH.

Approved Construction Plan

	Name	Date
Planning		
Public Utilities		
Traffic		
Fire		

NORTH

0 20 40 60 feet
SCALE: 1" = 20'

MIHALY
LAND DESIGN
PLANNING + LANDSCAPE ARCHITECTURE
330 MILITARY CUTOFF RD., Suite A3
Wilmington, NC 28405 910.392.4355

NORTH CAROLINA LICENSED LANDSCAPE ARCHITECT
JOSHUA W. MIHALY

Revisions
2017-10-26: UPDATED FOUNDATION PLANTING PER ENGINEER'S PLANS
2017-11-06: UPDATED PLAN PER REVISED ENGINEER'S DRAWINGS/CITY COMMENTS

CLIENT
NORRIS & TUNSTALL ENGINEERS
902 MARKET STREET
WILMINGTON, NC 28401
(910) 343-9653

PROJECT
HOLIDAY INN EXPRESS
839 MEDICAL CENTER DRIVE
WILMINGTON, NC 28401
LANDSCAPE PLANS

Date: 10/12/2017
Phase:
Job Number: 680-07

Designed by: MLD
Drawn by: ALM
Checked by: JWM

Sheet Title:
PLANTING PLAN

Sheet Number:
L1.1
of 1 sheets